CAST-CRETE®

"LEADERS IN THE PRECAST INDUSTRY" ™

DESIGN GUIDE
PRECAST CONCRETE
PRODUCTS

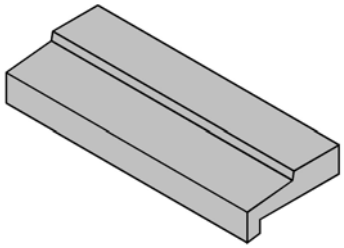

SILLS

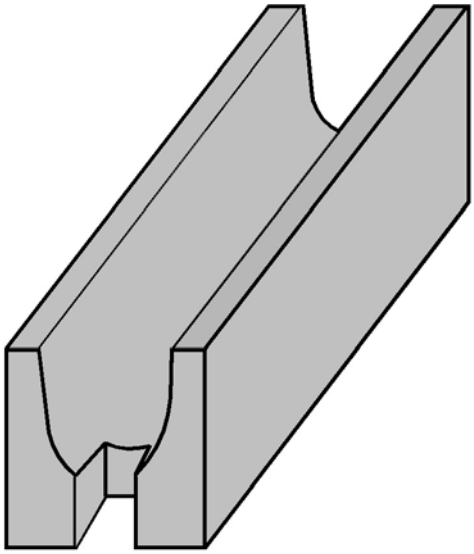

U - LINTELS

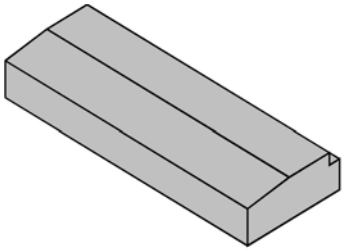

THRESHOLDS

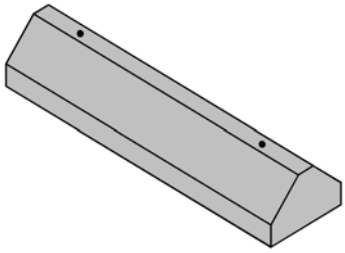

PARKING BUMPERS

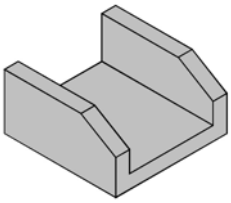

SCUPPERS

WWW.CASTCRETE.COM

May 2015

COMPANY HISTORY

Cast-Crete was founded in Tampa Bay, Florida in 1955 as a producer of precast concrete products for the building industry. With over 60 years experience, Cast-Crete is known in the precast concrete industry for its extensive knowledge, leadership, and innovation. Cast-Crete pioneered the use of precast concrete U - Lintels and today is the world's largest producer of precast concrete lintels and sills.

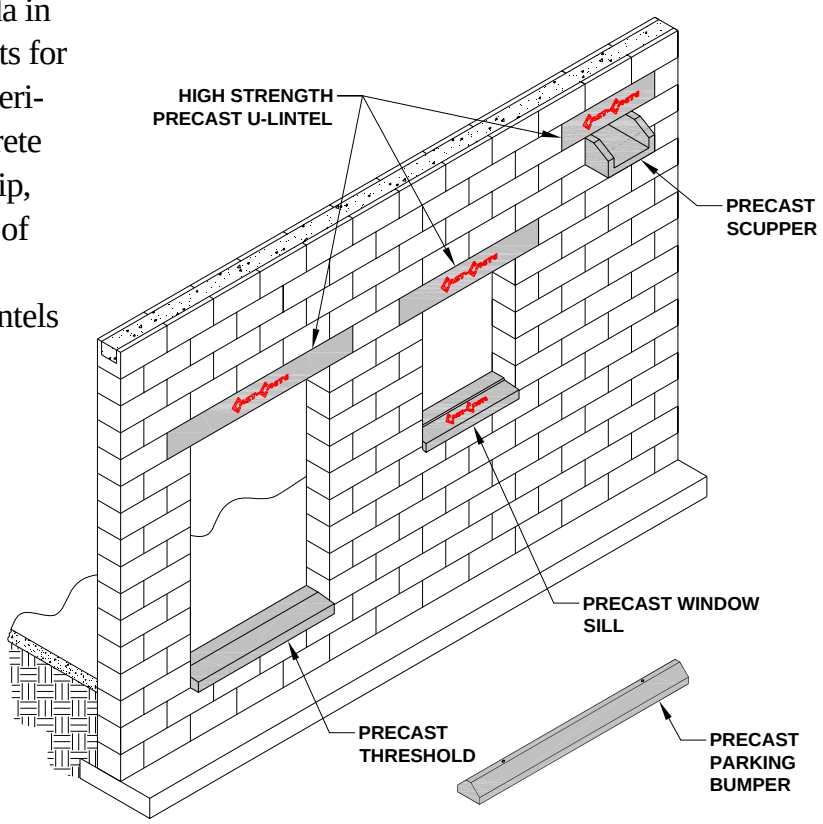

TECHNICAL SUPPORT

VISIT *WWW.CASTCRETE.COM* FOR:

- Additional product literature
- Technical support contact information
- Free National Concrete Masonry Association E-TEK manual
- And more…….

TABLE OF CONTENTS

INTRODUCTION

Company History 2
Technical Support 2
Corporate Policy 3

U-LINTELS

8 Inch Precast 4
8 Inch Prestressed 4
8 Inch Precast w/2 Inch Recess 5
12 Inch Precast 6
12 Inch Precast w/2 Inch Recess 7
10 Inch Precast 7
6 Inch Precast 8
U-Lintel Product Description and Benefits 8
Installation of Composite U-Lintel 9
Composite U-Lintel Types 10-11
How to Read Safe Load Tables 12
Arching Action & Triangular Load 13
RCMU 13
8 Inch Safe Load Tables 14
8 Inch Recess Safe Load Tables 16
6 Inch Safe Load Tables 17
12 Inch Safe Load Tables 18
8 Inch Recess Safe Load Tables 19

WINDOW SILLS

HiWind Wind Resistant 20
HiDri 22

THRESHOLDS

Swing Door 23
Sliding Glass Door 23

SCUPPERS

8,12, and 16 Inch Wide 24

PARKING BUMPERS

Heavy Duty 25

SOLID LINTELS

4 Inch Precast 26

LINTEL DATA SHEETS (APPENDIX A)

Data Sheet Introduction/Index A1
8 Inch U-Lintel A2
12 Inch U-Lintel A29
6 Inch U-Lintel A50
4 Inch Solid Lintel A63

CORPORATE POLICY

Every concrete products producer in America claims to sell quality products at competitive prices, and to back up all orders with superior service.

Cast-Crete also has these policies. But we say it this way:

1.QUALITY: Cast-Crete guarantees that every lintel and sill it sells meets or exceeds all known federal, state, and local strength and quality specifications. Should tests prove any failure to meet such specifications, Cast-Crete, at its own expense, will replace "IN THE WALL" all units supplied to the job.

2. SERVICE: Cast-Crete guarantees delivery as promised on every lintel and sill order on the agreed delivery date. If we fail to perform on any guaranteed delivery, Cast-Crete will pay for any resulting unproductive labor charges. Money talks. We don't claim to be perfect. But if you lose through our failure, you can look to us to pay the bill.

3.GUARANTEE: Cast-Crete's lintels and sills are guaranteed against any and all defects in work-manship and/or materials for the lifetime of the structure into which they are properly installed.

© 2015 Cast-Crete USA, Inc.

8” PRECAST U-LINTELS *STANDARD LENGTHS*

OVERALL LENGTH	*TOP STEEL*	*BOTTOM STEEL*
3’-0”	2 -7/32” wire	2 -#3 rebar
3’-4”	2 -7/32” wire	2 -#3 rebar
3’-6”	2 -7/32” wire	2 -#3 rebar
4’-0”	2 -7/32” wire	2 -#3 rebar
4’-6”	2 -7/32” wire	2 -#3 rebar
4’-8”	2 -7/32” wire	2 -#3 rebar
5’-4”	2 -7/32” wire	2 -#3 rebar
5’-10”	2 -7/32” wire	2 -#3 rebar
6’-0”	2 -7/32” wire	2 -#4 rebar
6’-6”	2 -7/32” wire	2 -#4 rebar
6’-8”	2 -7/32” wire	2 -#4 rebar
7’-4”	2 -7/32” wire	2 -#4 rebar
7’-6”	2 -7/32” wire	2 -#4 rebar
8’-0”	2 -#3 rebar	2 -#4 rebar
8’-8”	2 -#3 rebar	2 -#4 rebar
9’-4”	2 -#3 rebar	2 -#4 rebar
10’-0”	2 -#3 rebar	2 -#4 rebar
10’-6”	2 -#3 rebar	2 -#4 rebar
10’-8”	2 -#3 rebar	2 -#5 rebar
11’-4”	2 -#3 rebar	2 -#5 rebar
12’-0”	2 -#3 rebar	2 -#5 rebar
13’-4”	2 -#3 rebar	2 -#5 rebar
14’-0”	2 -#3 rebar	2 -#5 rebar

Additional lengths available by special order

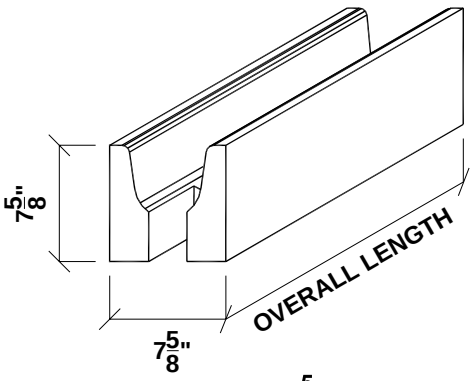

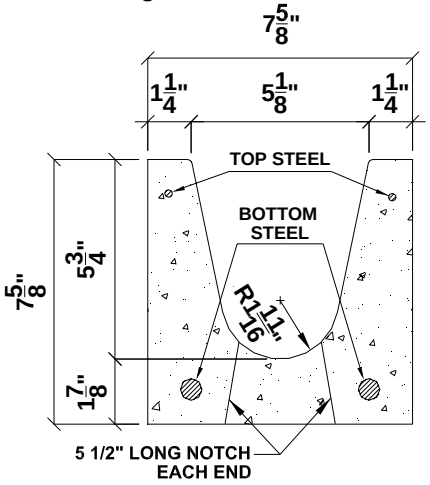

Rebar: ASTM A615 Grade 60
Wire: ASTM A510
Concrete Strength: 4000 psi
Average Self Weight: 33 plf
Finish: Grey Block

8” PRESTRESSED U-LINTELS *STANDARD LENGTHS*

OVERALL LENGTH	*TOP STEEL*	*BOTTOM STEEL*
14’-8”	NONE	2 -7/16 strand
15’-4”	NONE	2 -7/16 strand
17’-4”	NONE	2 -7/16 strand
19’-4”	2 -7/32” wire	2 -7/16 strand
21’-4”	2 -7/32” wire	2 -7/16 strand 2 - #4 rebar
22’-0”	2 -7/32” wire	2 -7/16 strand 2 - #4 rebar
24’-0”	2 -7/32” wire	2 -7/16 strand 2 - #4 rebar

Additional lengths available by special order

Rebar: ASTM A615 Grade 60
Wire: ASTM A510
Strand: ASTM A416 Grade 270
Concrete Strength: 6000 psi
Synthetic Fibers: 2.5 lbs/yd
Average Self Weight: 37 plf
Finish: Grey Smooth Form

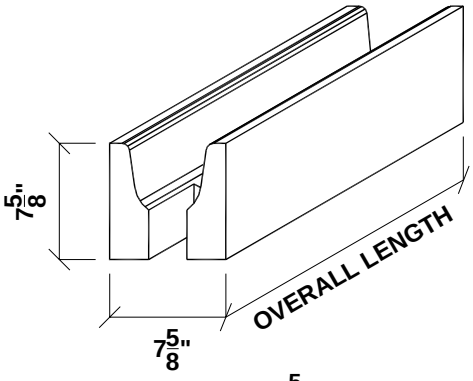

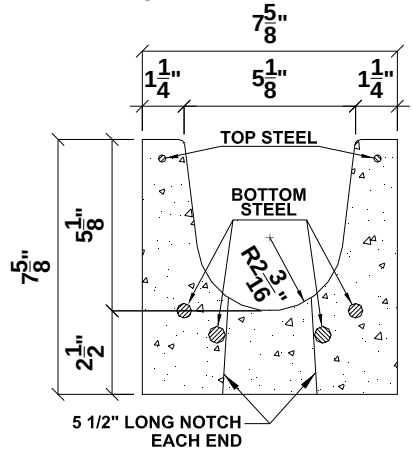

© 2015 Cast-Crete USA, Inc.

STANDARD LENGTHS

8” PRECAST W/2” RECESS DOOR U-LINTELS

OVERALL LENGTH	*RECESS LENGTH*	*DOOR SIZE*	*TOP STEEL*	*BOTTOM STEEL*
3’-8”	**2’-4”**	**2’-0”**	2 -7/32” wire	2 -#3 rebar
4’-0”	**2’-8”**	**2’-4”**	2 -7/32” wire	2 -#3 rebar
4’-4”	**3’-0”**	**2’-8”**	2 -7/32” wire	2 -#3 rebar
4’-6”	**3’-4”**	**3’-0”**	2 -7/32” wire	2 -#3 rebar
5’-8”	**4’-4”**	**4’-0”**	2 -7/32” wire	2 -#3 rebar
5’-10”	**4’-8”**	**3’-0” W/12” sidelite**	2 -7/32” wire	2 -#3 rebar
6’-8”	**5’-4”**	**5’-0”**	2 -#3 rebar	2 -#4 rebar
7’-0”	**5’-8”**	**5’-4”**	2 -#3 rebar	2 -#4 rebar
7’-6”	**6’-4”**	**6’-0”**	2 -#3 rebar	2 -#4 rebar
9’-8”	**8’-4”**	**8’-0”**	2 -#3 rebar	2 -#4 rebar

Additional lengths available by special order

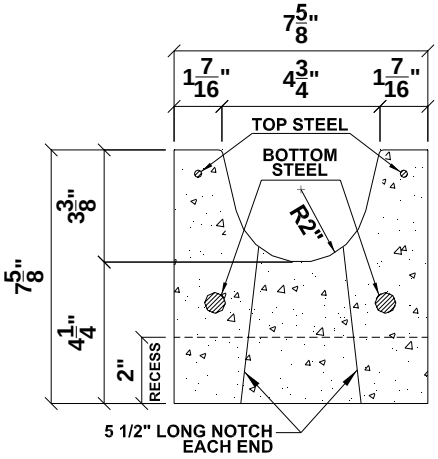

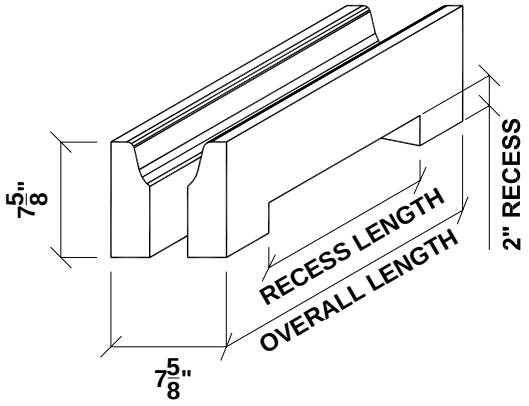

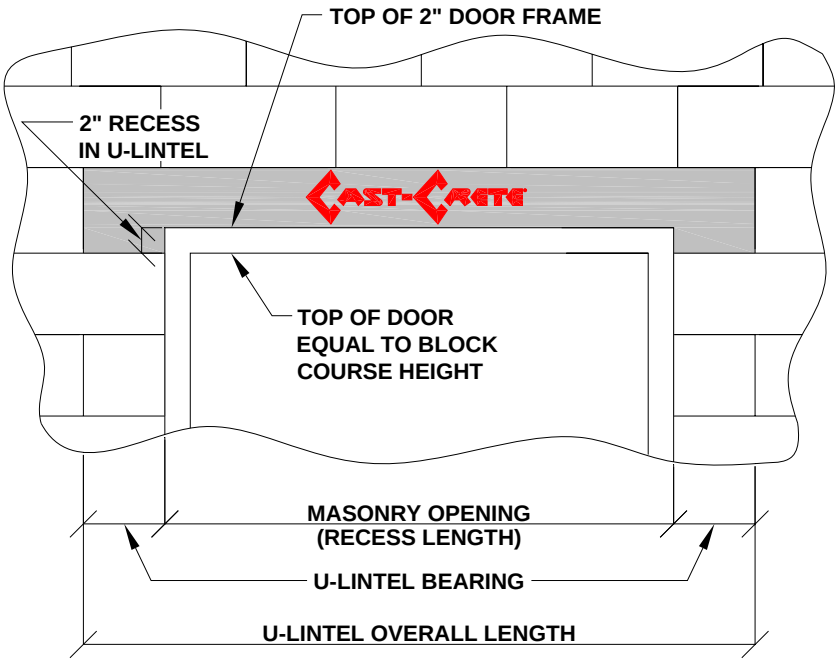

TYPICAL USE

Rebar: ASTM A615 Grade 60
Wire: ASTM A510
Concrete Strength: 4000 psi
Average Self Weight: 29 plf
Finish: Grey Block

Note: 2” recess door U-lintels are used where the top of the door is equal to the block course height with a 2” door frame.

© 2015 Cast-Crete USA, Inc.

12” PRECAST U-LINTELS

STANDARD LENGTHS

OVERALL LENGTH	*TOP STEEL*	*BOTTOM STEEL*
3’-4”	2 -7/32” wire	2 -#5 rebar
3’-6”	2 -7/32” wire	2 -#5 rebar
4’-0”	2 -7/32” wire	2 -#5 rebar
4’-6”	2 -7/32” wire	2 -#5 rebar
4’-8”	2 -7/32” wire	2 -#5 rebar
5’-4”	2 -7/32” wire	2 -#5 rebar
5’-10”	2 -7/32” wire	2 -#5 rebar
6’-0”	2 -7/32” wire	2 -#5 rebar
6’-6”	2 -7/32” wire	2 -#5 rebar
6’-8”	2 -7/32” wire	2 -#5 rebar
7’-4”	2 -7/32” wire	2 -#5 rebar
7’-6”	2 -7/32” wire	2 -#5 rebar
8’-0”	2 -#3 rebar	2 -#5 rebar
8’-8”	2 -#3 rebar	2 -#5 rebar
9’-4”	2 -#3 rebar	2 -#5 rebar
10’-6”	2 -#3 rebar	2 -#5 rebar
10’-8”	2 -#3 rebar	2 -#5 rebar
11’-4”	2 -#3 rebar	2 -#5 rebar
12’-0”	2 -#3 rebar	2 -#5 rebar
13’-4”	2 -#3 rebar	2 -#5 rebar
14’-0”	2 -#3 rebar	2 -#5 rebar
14’-8”	2 -#3 rebar	2 -#5 rebar
15’-4”	2 -#3 rebar	2 -#5 rebar
17’-4”	2 -#3 rebar	2 -#5 rebar
19’-4”	2 -#3 rebar	2 -#5 rebar

Additional lengths available by special order

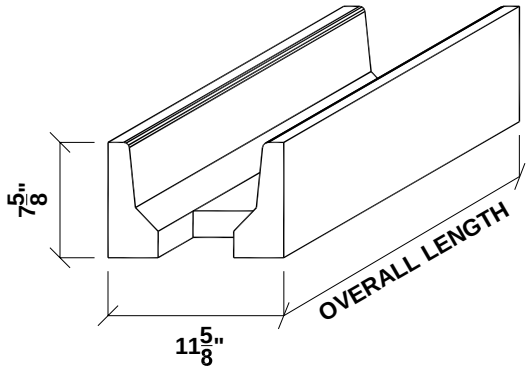

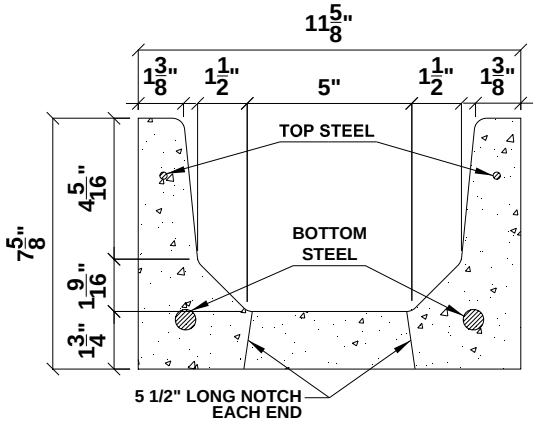

Rebar: ASTM A615 Grade 60
Wire: ASTM A510
Concrete Strength: 6000 psi
Average Self Weight: 44 plf
Finish: Grey Smooth Form

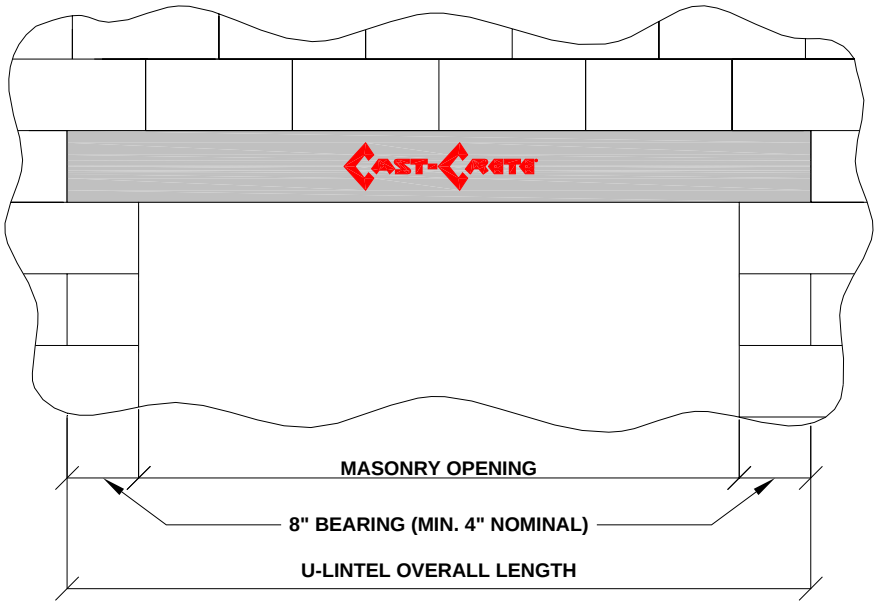

TYPICAL USE

© 2015 Cast-Crete USA, Inc.

12” PRECAST W/2” RECESS DOOR U-LINTELS

OVERALL LENGTH	*RECESS LENGTH*	*DOOR SIZE*	*TOP STEEL*	*BOTTOM STEEL*
4’-0”	**2’-8”**	**2’-4”**	2 -7/32” wire	2 -#5 rebar
4’-4”	**3’-0”**	**2’-8”**	2 -7/32” wire	2 -#5 rebar
4’-6”	**3’-4”**	**3’-0”**	2 -7/32” wire	2 -#5 rebar
5’-8”	**4’-4”**	**4’-0”**	2 -7/32” wire	2 -#5 rebar
6’-8”	**5’-4”**	**5’-0”**	2 -7/32” wire	2 -#5 rebar
7’-0”	**5’-8”**	**5’-4”**	2 -7/32” wire	2 -#5 rebar
7’-6”	**6’-4”**	**6’-0”**	2 -7/32” wire	2 -#5 rebar
9’-8”	**8’-4”**	**8’-0”**	2 -#3 rebar	2 -#5 rebar

Additional lengths available by special order

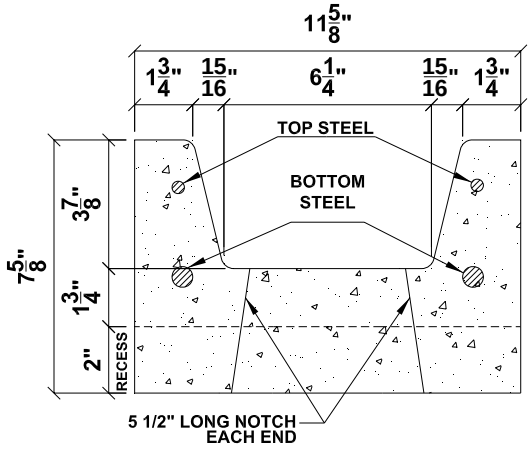

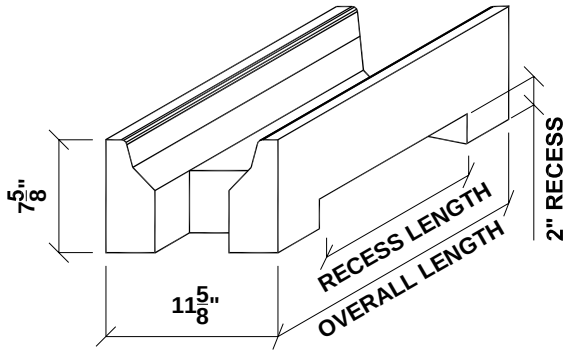

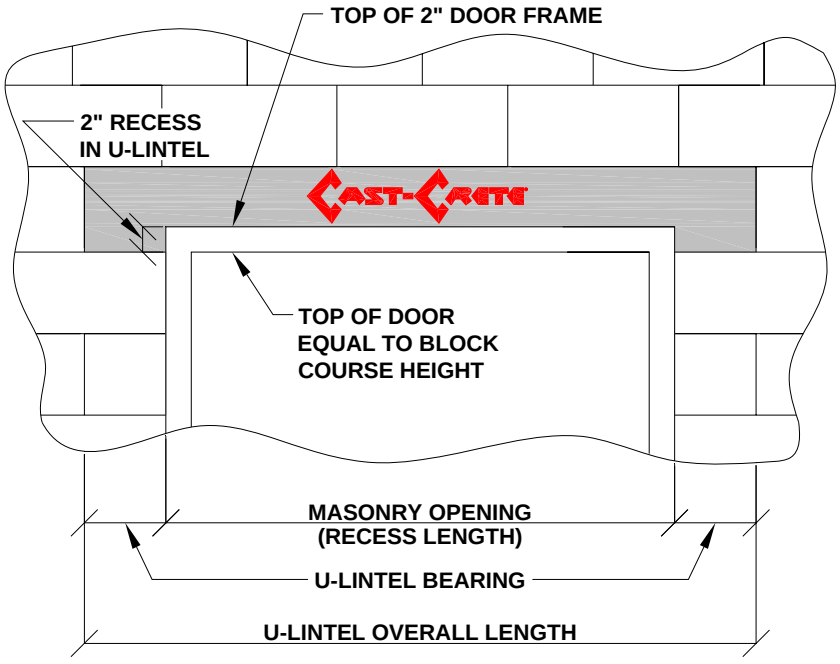

TYPICAL USE

Rebar: ASTM A615 Grade 60
Wire: ASTM A510
Concrete Strength: 6000 psi
Average Self Weight: 39 plf
Finish: Grey Smooth Form

Note: 2” recess door U-lintels are used where the top of the door is equal to the block course height with a 2” door frame.

10” PRECAST U-LINTELS

10” Precast U-Lintels are custom made to order. Contact Cast-Crete for additional information.

© 2015 Cast-Crete USA, Inc.

6” PRECAST U-LINTELS

STANDARD LENGTHS

OVERALL LENGTH	*TOP STEEL*	*BOTTOM STEEL*
3’-4”	2 -7/32” wire	2 -#3 rebar
3’-6”	2 -7/32” wire	2 -#3 rebar
4’-0”	2 -7/32” wire	2 -#3 rebar
4’-6”	2 -7/32” wire	2 -#3 rebar
4’-8”	2 -7/32” wire	2 -#3 rebar
5’-4”	2 -7/32” wire	2 -#3 rebar
5’-10”	2 -7/32” wire	2 -#3 rebar
6’-0”	2 -7/32” wire	2 -#4 rebar
6’-6”	2 -7/32” wire	2 -#4 rebar
6’-8”	2 -7/32” wire	2 -#4 rebar
7’-4”	2 -7/32” wire	2 -#4 rebar
7’-6”	2 -7/32” wire	2 -#4 rebar
8’-0”	2 -#3 rebar	2 -#4 rebar
8’-8”	2 -#3 rebar	2 -#4 rebar
9’-4”	2 -#3 rebar	2 -#4 rebar
10’-6”	2 -#3 rebar	2 -#4 rebar
10’-8”	2 -#3 rebar	2 -#5 rebar
11’-4”	2 -#3 rebar	2 -#5 rebar
12’-0”	2 -#3 rebar	2 -#5 rebar
13’-4”	2 -#3 rebar	2 -#5 rebar
14’-0”	2 -#3 rebar	2 -#5 rebar
17’-4”	2 -#3 rebar	2 -#5 rebar

Additional lengths available by special order

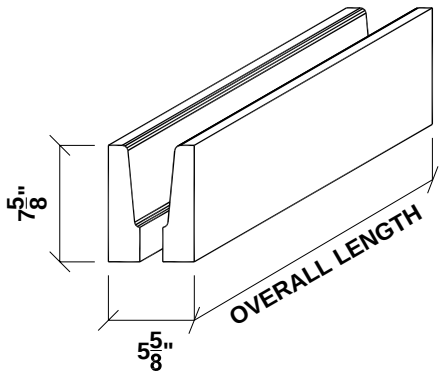

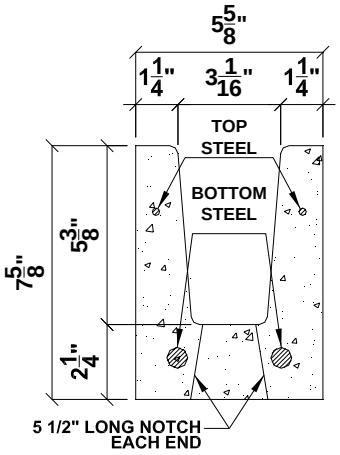

Rebar: ASTM A615 Grade 60
Wire: ASTM A510
Concrete Strength: 6000 psi
Average Self Weight: 30 plf
Finish: Grey Smooth Form

U-LINTEL PRODUCT DESCRIPTION

High strength precast and prestressed concrete U-Shape lintels designed to be used unfilled or filled with grout to form a composite reinforced beam using concrete masonry units.

U-LINTELS BENEFITS

LABOR SAVINGS - Set one U-Lintel in lieu of multiple concrete masonry units.

TIME SAVINGS - No waiting for shoring to be installed. Just set the lintel and continue with the next courses.

FLEXIBILTIY - Unlimited variations in composite height and field reinforcing results in the U-Lintel being the only lintel required for the project.

SUPERIOR QUALITY - Manufactured in a quality controlled plant environment to strict tolerances and eliminates the uncertainties of field constructed lintels.

ELIMINATION OF STRUCTUAL STEEL LINTELS - Eliminates problems associated with expensive structural steel lintels such as fabrication lead times, corrosion, thermal bridging and differential movement at the supports.

© 2015 Cast-Crete USA, Inc.

INSTALLATION OF COMPOSITE U-LINTEL

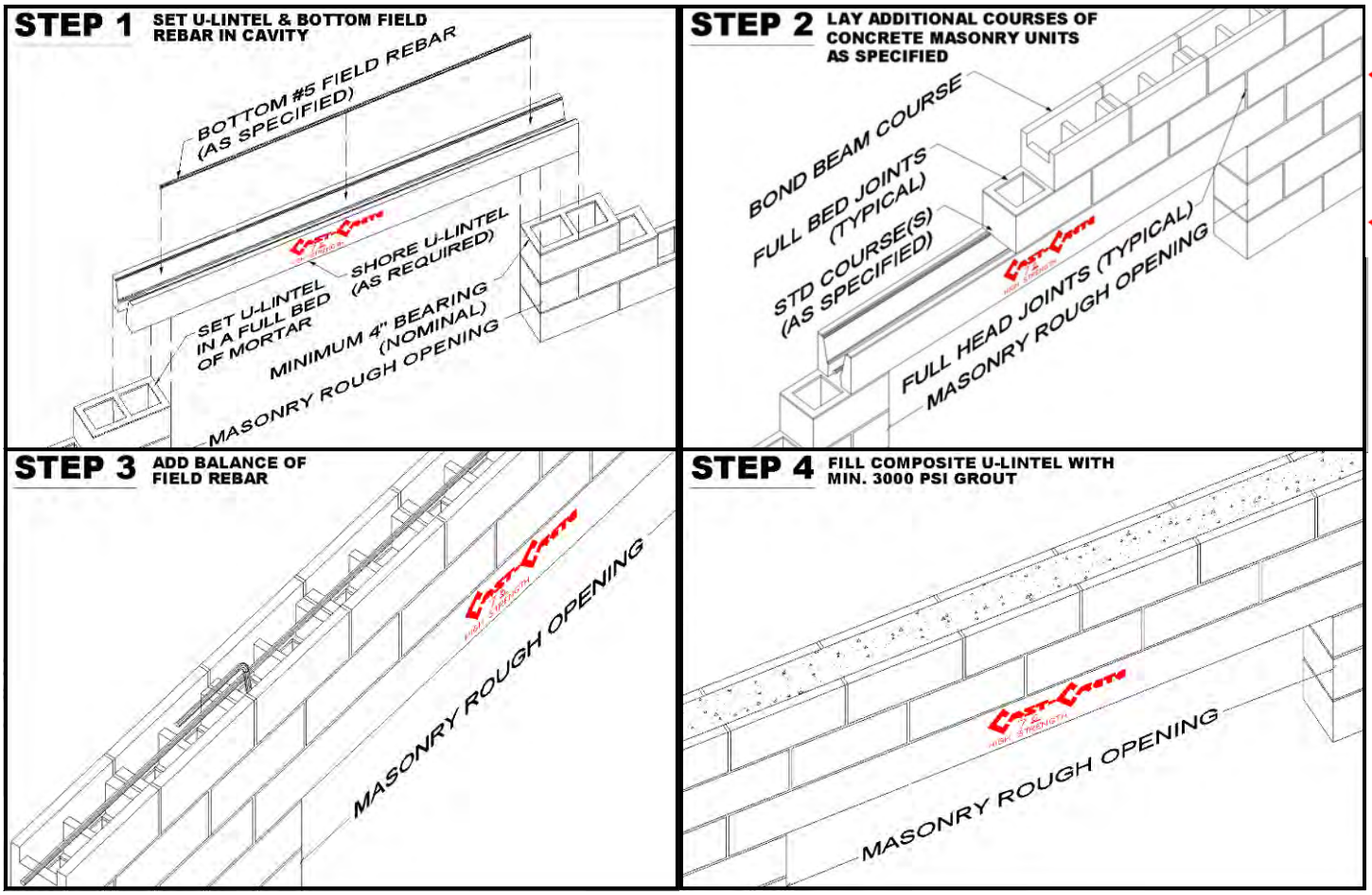

INSTALLATION NOTES

1. Installation of U-lintels must comply with architectural and/or structural drawings.
2. U-lintels are manufactured with 5 1/2 inch long notch at ends to accommodate vertical cell reinforcing and grout.
3. U-lintels can be field cut to the required length.
4. Bottom field added rebar to be located at the bottom of U-lintel cavity.
5. Cast-in-place concrete may be provided in composite U-lintel in lieu of concrete masonry units.
6. The exterior surface of U-lintels installed in exterior concrete masonry walls shall have a coating of stucco applied in accordance with ASTM C-926 or other approved coating.
7. Concrete masonry units used in composite U-Lintel shall be laid in a running bond.
8. Shore composite lintels as required.

COMPOSITE U-LINTEL MATERIALS

- Grout per ASTM C476 f'g = 3000 psi w/maximum 3/8 inch aggregate and 8 to 11 inch slump.
- Rebar per ASTM A615 Grade 60 or Grade 40.
- Concrete masonry units (CMU) per ASTM C90 with minimum net area compressive strength = 1900 psi.
- Mortar per ASTM C270 Type M or S.

© 2015 Cast-Crete USA, Inc.

8” COMPOSITE U-LINTEL TYPES

8U8

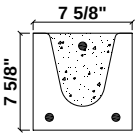

8F8-0B/1T

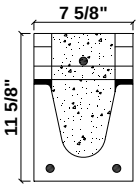

8F12-0B/1T

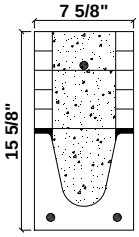

8F16-0B/1T

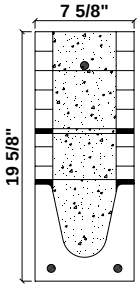

8F20-0B/1T

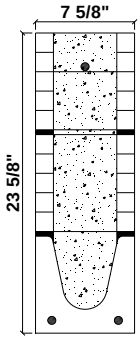

8F24-0B/1T

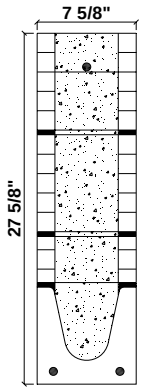

8F28-0B/1T

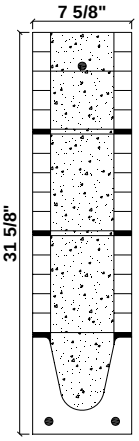

8F32-0B/1T

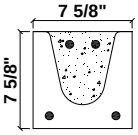

8F8-0B/2T

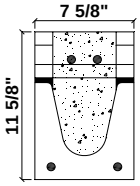

8F12-0B/2T

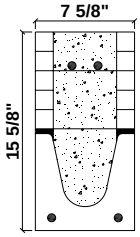

8F16-0B/2T

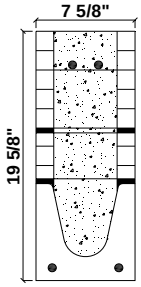

8F20-0B/2T

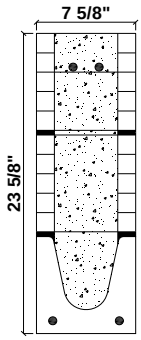

8F24-0B/2T

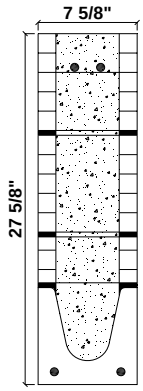

8F28-0B/2T

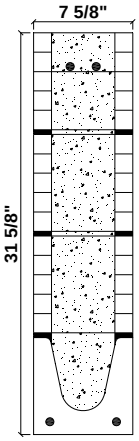

8F32-0B/2T

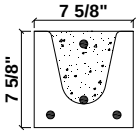

8F8-1B/1T

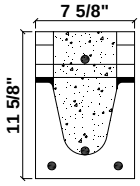

8F12-1B/1T

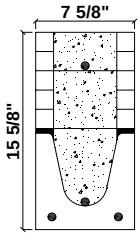

8F16-1B/1T

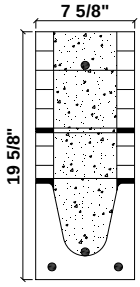

8F20-1B/1T

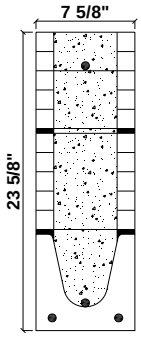

8F24-1B/1T

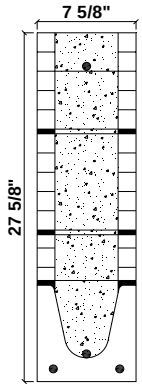

8F28-1B/1T

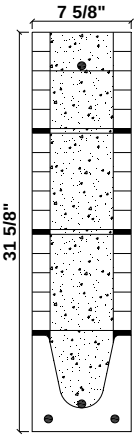

8F32-1B/1T

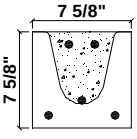

8F8-1B/2T

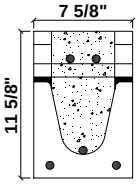

8F12-1B/2T

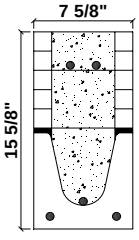

8F16-1B/2T

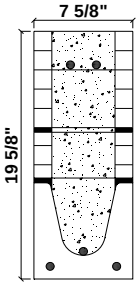

8F20-1B/2T

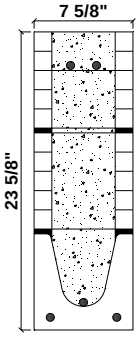

8F24-1B/2T

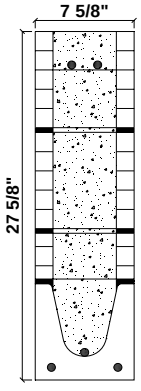

8F28-1B/2T

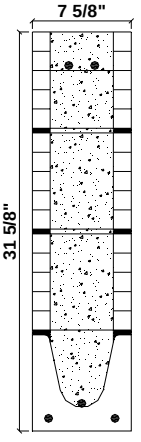

8F32-1B/2T

© 2015 Cast-Crete USA, Inc.

6” COMPOSITE U-LINTEL TYPES

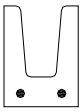

6U8

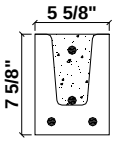

6F8-1B/1T

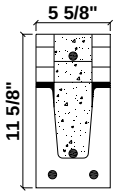

6F12-1B/1T

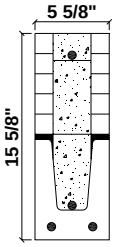

6F16-1B/1T

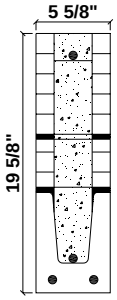

6F20-1B/1T

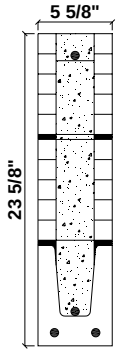

6F24-1B/1T

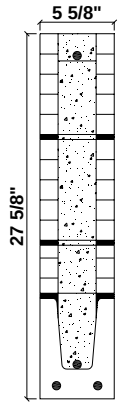

6F28-1B/1T

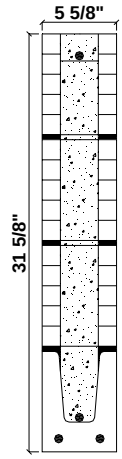

6F32-1B/1T

12” COMPOSITE U-LINTEL TYPES

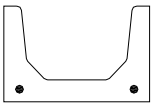

12U8

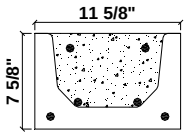

12F8-2B/2T

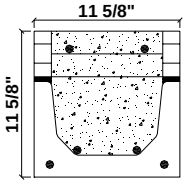

12F12-2B/2T

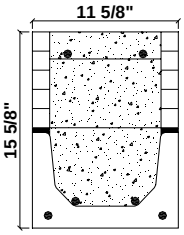

12F16-2B/2T

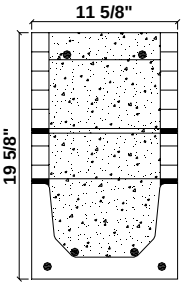

12F20-2B/2T

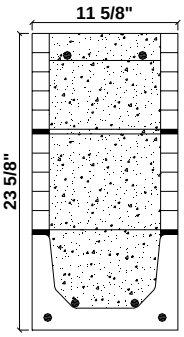

12F24-2B/2T

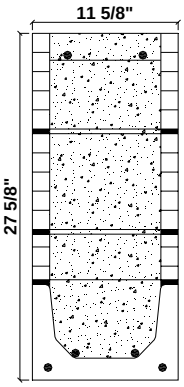

12F28-2B/2T

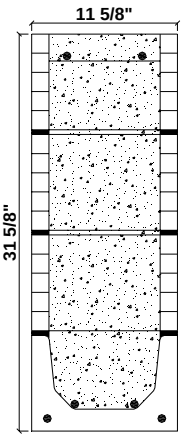

12F32-2B/2T

12” RECESS COMPOSITE U-LINTEL TYPES

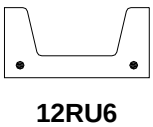

12RU6

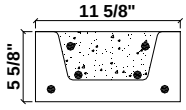

12RF6-2B/2T

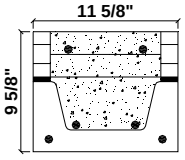

12RF10-2B/2T

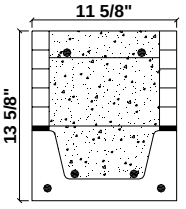

12RF14-2B/2T

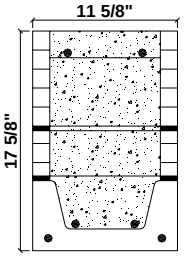

12RF18-2B/2T

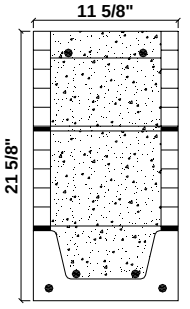

12RF22-2B/2T

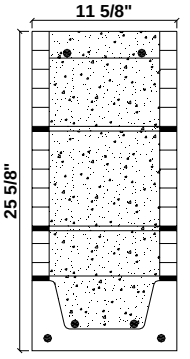

12RF26-2B/2T

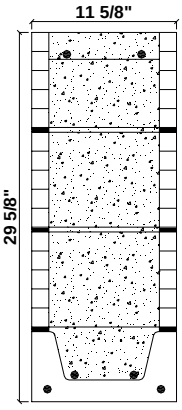

12RF30-2B/2T

© 2015 Cast-Crete USA, Inc.

HOW TO READ SAFE LOAD TABLES

TYPE DESIGNATION

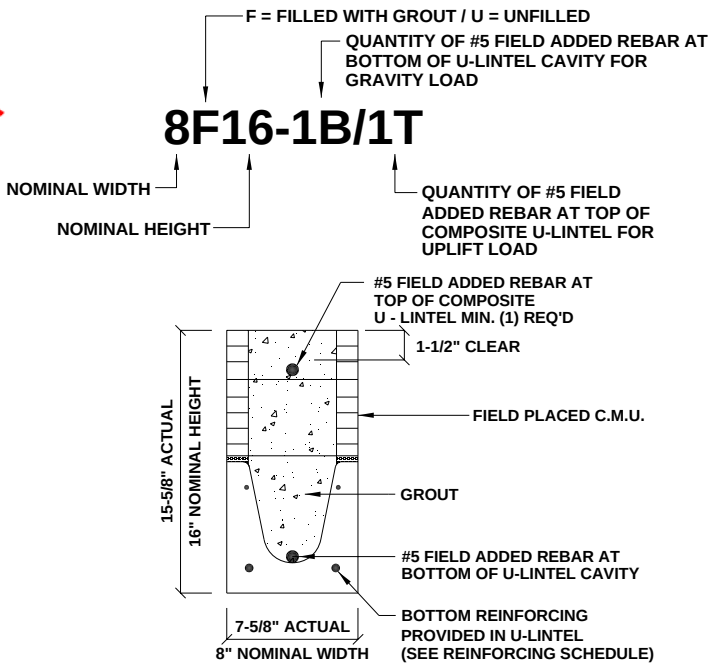

For a 5'-10" overall length U-lintel Type 8F16-1B/1T:
Safe superimposed gravity load = 4360 PLF
Safe superimposed uplift load = 2080 PLF
Safe superimposed lateral load = 339 PLF

CAST-CRETE	GRAVITY			
OVERALL LINTEL LENGTH / TYPE OF LINTEL	8U8	8F8-0B 8F8-1B	8F12-0B 8F12-1B	8F16-0B 8F16-1B
2'-8" TO 3'-6" PRECAST	2231	3069 3069	3719 4605	5163 6113
3'-7" TO 4'-0" PRECAST	1966	2561 2693	2751 4605	3820 6113
4'-1" TO 4'-6" PRECAST	1599	1969 2189	2110 4375	2931 6113
4'-7" TO 5'-4" PRECAST	1217	1349 1663	1438 3090	1999 5365
5'-5" TO 5'-10" PRECAST	1062	1105 1451	1173 2622	1631 4360
5'-11" TO 6'-6" PRECAST	908	1238 1238	2177 2177	3480 3480

CAST-CRETE	UPLIFT			LATERAL		
OVERALL LINTEL LENGTH / TYPE OF LINTEL	8F8-1T 8F8-2T	8F12-1T 8F12-2T	8F16-1T 8F16-2T	8U8	8F8	RCMU
2'-8" TO 3'-6" PRECAST	1569 1569	2655 2655	3524 3524	1025	1024	1598
3'-7" TO 4'-0" PRECAST	1363 1363	2305 2305	3060 3060	765	763	1309
4'-1" TO 4'-6" PRECAST	1207 1207	2040 2040	2707 2707	592	591	1073
4'-7" TO 5'-4" PRECAST	1016 1016	1715 (11) 1715	2276 (4) 2276	411	411	745
5'-5" TO 5'-10" PRECAST	909 929	1567 (18) 1567	2080 (13) 2080	340	339	616
5'-11" TO 6'-6" PRECAST	835 (12) 835	1407 (26) 1407	1868 (23) 1868	507	721	490

SAFE LOAD TABLE NOTES

1. All values based on minimum 4 inch nominal bearing. Exception: Safe loads for unfilled U-lintels must be reduced by 20% if bearing length is less than 6 1/2 inches.
2. N.R. = Not Rated.
3. Safe loads are superimposed allowable loads.
4. One #7 rebar may be substituted for two #5 rebar in 8 inch U-lintels only.
5. The designer may evaluate concentrated loads from the safe load tables by calculating the maximum resisting moment and shear at d-away from the face of support.
6. For composite U-lintel heights not shown, use safe load from the next lower height.
7. All safe loads in units of pounds per linear foot.
8. All safe loads based on simply supported span.
9. The number in the parenthesis indicates the percent reduction for grade 40 field added rebar.
   Example: 7'-6" U-lintel Type 8F32-1B safe gravity load = 6427 (15). Calculate the 15% reduction:

   6472 (.85) = 5501plf.

7. Safe load ratings based on rational design analysis per ACI 318 and ACI 530.
8. U-lintels loaded simultaneously with vertical (gravity or uplift) and horizontal (lateral) loads should be checked for the combined loading with the following equation:

$$\frac{\text{Applied vertical load}}{\text{Safe vertical load}} + \frac{\text{Applied horizontal load}}{\text{Safe horizontal load}} \leq 1.0$$

© 2015 Cast-Crete USA, Inc.

ARCHING ACTION & TRIANGULAR LOAD

Arching action results in a triangular load with the apex located at midspan. When using the Safe Load Tables the triangular load may be converted into an equivalent uniform load by the equation:

Equivalent Uniform Load = .33 x Unit Weight of Wall x Effective Span

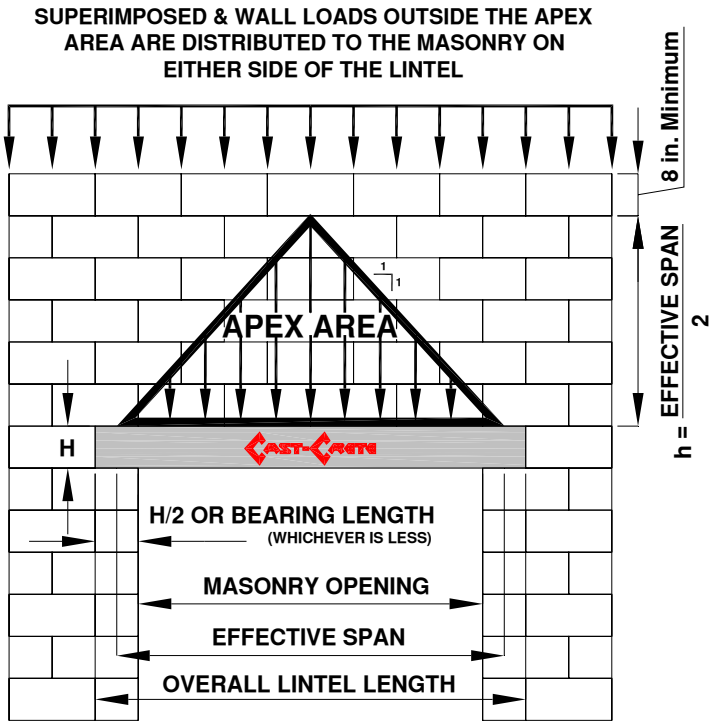

Arching action can be assumed if the following conditions are met:

- Masonry wall laid in running bond
- Sufficient wall height above the composite U-lintel height (H) to permit formation of a triangle with a height h = 1/2 x effective span
- A minimum 8 in. of wall height above the apex area
- Control joints are not adjacent to the lintel
- Sufficient masonry on each side of the opening to resist lateral thrust from the arching action

RCMU (Reinforced Concrete Masonry Unit)

The safe lateral load capacity is conservatively based on the 8 inch high precast U-lintel section only. If needed in high wind areas, additional lateral capacity can be obtained by providing Reinforced Concrete Masonry Units (RCMU) with two #5 rebar in the course(s) above the 8 inch high precast U-lintel

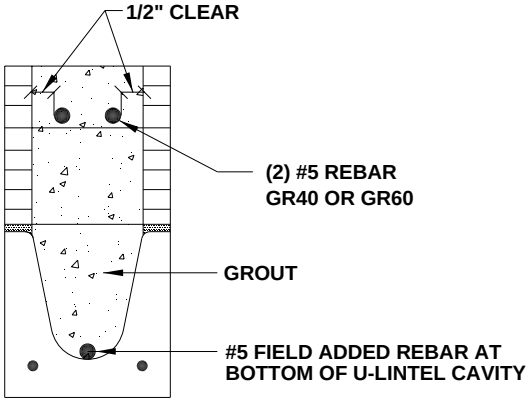

For a 5'-10" overall length U-lintel Type 8F16-1B/2T:

8F8 = 339 PLF

RCMU = 616 PLF

Total safe superimposed lateral load = 955 PLF

CAST-CRETE		UPLIFT			LATERAL		
OVERALL LINTEL LENGTH \ TYPE OF LINTEL		8F8-1T / 8F8-2T	8F12-1T / 8F12-2T	8F16-1T / 8F16-2T	8U8	8F8	RCMU
2'-8" TO 3'-6"	PRECAST	1569 / 1569	2655 / 2655	3524 / 3524	1025	1024	1598
3'-7" TO 4'-0"	PRECAST	1363 / 1363	2305 / 2305	3060 / 3060	765	763	1309
4'-1" TO 4'-6"	PRECAST	1207 / 1207	2040 / 2040	2707 / 2707	592	591	1073
4'-7" TO 5'-4"	PRECAST	1016 / 1016	1715(11) / 1715	2276(4) / 2276	411	411	745
5'-5" TO 5'-10"	PRECAST	909 / 929	1567(18) / 1567	2080(13) / 2080	340	339	616
5'-11" TO 6'-6"	PRECAST	835(12) / 835	1407(26) / 1407	1868(21) / 1868	507	721	490

Note: There is no limit to the number of courses of Reinforced Concrete Masonry Units (RCMU) that may be added above the 8 inch high U-lintel section. Each RCMU course will result in an additional 616 PLF lateral load capacity.

© 2015 Cast-Crete USA, Inc.

8” PRECAST U-LINTELS SAFE LOADS (LBS/FT)

CAST-CRETE		GRAVITY						
TYPE OF LINTEL / OVERALL LINTEL LENGTH		8U8	8F8-0B	8F12-0B	8F16-0B	8F20-0B	8F24-0B	8F28-0B	8F32-0B
			8F8-1B	8F12-1B	8F16-1B	8F20-1B	8F24-1B	8F28-1B	8F32-1B
2'-8" TO 3'-6"	PRECAST	2231	3069	3719	5163	6607	8054	9502	10951
			3069	4605	6113	7547	8974	10394	11809
3'-7" TO 4'-0"	PRECAST	1966	2561	2751	3820	4890	5961	7034	8107
			2693	4605	6113	7547	8974	10394	11809
4'-1" TO 4'-6"	PRECAST	1599	1969	2110	2931	3753	4576	5400	6224
			2189	4375	6113	7547 (7)	8672	10294	11809
4'-7" TO 5'-4"	PRECAST	1217	1349	1438	1999	2560	3123	3686	4249
			1663	3090	5365	7547 (36)	7342 (19)	8733 (19)	10127 (19)
5'-5" TO 5'-10"	PRECAST	1062	1105	1173	1631	2090	2549	3009	3470
			1451	2622	4360	7168 (45)	6036 (19)	7181 (19)	8328 (20)
5'-11" TO 6'-6"	PRECAST	908	1238	2177	3480	3031	3707	4383	5061
			1238	2177	3480	5381	8360	10394 (37)	8825 (14)
6'-7" TO 7'-6"	PRECAST	743	1011	1729	2632	2205	2698	3191	3685
			1011	1729	2661	3898	5681	8467 (44)	6472 (15)
7'-7" TO 9'-4"	PRECAST	554	699	1160	1625	2564	3486	2818	3302
			752	1245	1843	2564	3486	4705 (37)	6390 (47)
9'-5" TO 10'-6"	PRECAST	475	535	890	1247	2093	2777	2163	2536
			643	1052	1533	2093	2781	3643 (38)	4754 (45)
10'-7" TO 11'-4"	PRECAST	362	582	945	1366	1846	2423	3127	4006
			582	945	1366	1846	2423	3127	4006
11'-5" TO 12'-0"	PRECAST	337	540	873	1254	1684	2193	2805	3552
			540	873	1254	1684	2193	2805	3552
12'-1" TO 13'-4"	PRECAST	296	471	755	1075	1428	1838	2316	2883
			471	755	1075	1428	1838	2316	2883
13'-5" TO 14'-0"	PRECAST	279	424	706	1002	1326	1697	2127	2630
			442	706	1002	1326	1697	2127	2630
14'-1" TO 14'-8"	PRESTRESSED	NR	NR	NR	NR	NR	NR	NR	NR
			458	783	1370	1902	2245	2517	2712
14'-9" TO 15'-4"	PRESTRESSED	NR	NR	NR	NR	NR	NR	NR	NR
			412	710	1250	1733	2058	2320	2513
15'-5" TO 17'-4"	PRESTRESSED	NR	NR	NR	NR	NR	NR	NR	NR
			300	548	950	1326	1609	1849	2047
17'-5" TO 19'-4"	PRESTRESSED	NR	NR	NR	NR	NR	NR	NR	NR
			235	420	750	1037	1282	1515	1716
19'-5" TO 21'-4"	PRESTRESSED	NR	NR	NR	NR	NR	NR	NR	NR
			180	340	598	845	1114	1359	1468
21'-5" TO 22'-0"	PRESTRESSED	NR	NR	NR	NR	NR	NR	NR	NR
			165	315	550	784	1047	1285	1399
22'-1" TO 24'-0"	PRESTRESSED	NR	NR	NR	NR	NR	NR	NR	NR
			129	250	450	654	884	1092	1222

© 2015 Cast-Crete USA, Inc.

SAFE LOADS (LBS/FT) 8” PRECAST U-LINTELS

OVERALL LINTEL LENGTH / TYPE OF LINTEL		UPLIFT							LATERAL		
		8F8-1T	8F12-1T	8F16-1T	8F20-1T	8F24-1T	8F28-1T	8F32-1T	8U8	8F8	RCMU
		8F8-2T	8F12-2T	8F16-2T	8F20-2T	8F24-2T	8F28-2T	8F32-2T			
2'-8" TO 3'-6"	PRECAST	1569	2655	3524	4394	5263	6132	7001	1025	1024	1598
		1569	2655	3524	4394	5263	6132	7001			
3'-7" TO 4'-0"	PRECAST	1363	2305	3060	3815	4570	5325	6079	765	763	1309
		1363	2305	3060	3815	4570	5325	6079			
4'-1" TO 4'-6"	PRECAST	1207	2040	2707	3375	4043	4711	5379	592	591	1073
		1207	2040	2707	3375	4043	4711	5379			
4'-7" TO 5'-4"	PRECAST	1016	1715 (11)	2276 (4)	2838	3399	3961	4522	411	411	745
		1016	1715	2276	2838	3399	3961	4522			
5'-5" TO 5'-10"	PRECAST	909	1567 (18)	2080 (13)	2593 (9)	3107 (6)	3620 (4)	4133 (3)	340	339	616
		929	1567	2080	2593	3107	3620	4133			
5'-11" TO 6'-6"	PRECAST	835 (12)	1407 (26)	1868 (21)	2329 (18)	2790 (16)	3251 (14)	3712 (12)	507	721	490
		835	1407	1868	2329	2790	3251	3712			
6'-7" TO 7'-6"	PRECAST	727 (23)	1065 (26)	1624 (31)	2025 (28)	2426 (26)	2827 (25)	3228 (24)	424	534	363
		727	1224	1624	2025	2426	2827	3228			
7'-7" TO 9'-4"	PRECAST	591	708 (25)	1136 (34)	1474 (34)	1815 (34)	2157 (34)	2500 (34)	326	512	230
		591	862	1318	1643	1969	2294	2619			
9'-5" TO 10'-6"	PRECAST	530	575 (24)	916 (33)	1188 (33)	1461 (33)	1736 (33)	2011 (33)	284	401	180
		530	695	1180 (8)	1472 (4)	1763 (2)	2055	2346			
10'-7" TO 11'-4"	PRECAST	474	504 (23)	800 (32)	1037 (32)	1274 (32)	1513 (32)	1753 (32)	260	452	154
		494	607	1042 (10)	1372 (11)	1643 (8)	1915 (6)	2187 (5)			
11'-5" TO 12'-0"	PRECAST	470 (9)	458 (23)	724 (31)	938 (32)	1153 (32)	1369 (32)	1585 (32)	244	402	137
		470	550	940 (10)	1302 (15)	1560 (13)	1818 (11)	2075 (10)			
12'-1" TO 13'-4"	PRECAST	418 (15)	386 (22)	607 (30)	785 (30)	964 (30)	1143 (31)	1323 (31)	217	324	110
		428	460	780 (9)	1159 (21)	1418 (20)	1653 (19)	1887 (17)			
13'-5" TO 14'-0"	PRECAST	384 (15)	358 (21)	560 (29)	724 (30)	889 (30)	1054 (30)	1220 (30)	205	293	100
		410	425	717 (9)	1063 (21)	1358 (23)	1582 (22)	1807 (21)			
14'-1" TO 14'-8"	PRESTRESSED	239	334 (21)	520 (29)	672 (29)	825 (29)	978 (29)	1131 (30)	NR	284	91
		246	395	663 (9)	980 (20)	1303 (26)	1518 (25)	1734 (24)			
14'-9" TO 15'-4"	PRESTRESSED	224	313 (20)	486 (28)	627 (29)	769 (29)	911 (29)	1054 (29)	NR	259	83
		230	368	616 (9)	908 (20)	1240 (28)	1460 (27)	1668 (26)			
15'-5" TO 17'-4"	PRESTRESSED	187	263 (19)	405 (26)	521 (27)	638 (27)	756 (27)	873 (27)	NR	194	64
		192	306	506 (8)	740 (19)	1005 (27)	1271 (31)	1473 (31)			
17'-5" TO 19'-4"	PRESTRESSED	162	229 (17)	348 (25)	447 (25)	547 (25)	647 (25)	747 (25)	NR	148	52
		166	263	429 (8)	623 (18)	841 (26)	1059 (30)	1227 (30)			
19'-5" TO 21'-4"	PRESTRESSED	142	204 (16)	307 (23)	393 (23)	480 (23)	568 (24)	655 (24)	NR	125	42
		142	232	373 (7)	537 (17)	721 (25)	905 (29)	1048 (29)			
21'-5" TO 22'-0"	PRESTRESSED	137	197 (15)	295 (22)	379 (23)	462 (23)	546 (23)	630 (23)	NR	116	40
		137	223	358 (7)	513 (17)	688 (24)	863 (28)	999 (28)			
22'-1" TO 24'-0"	PRESTRESSED	124	179 (14)	267 (21)	342 (21)	416 (21)	492 (21)	567 (22)	NR	91	33
		124	202	319 (7)	455 (16)	606 (23)	757 (27)	876 (27)			

© 2015 Cast-Crete USA, Inc.

8” PRECAST W/2” RECESS DOOR U-LINTELS SAFE LOADS (LBS/FT)

CAST-CRETE	GRAVITY						
TYPE OF LINTEL / OVERALL LINTEL LENGTH *	8RU6	8RF6-0B	8RF10-0B	8RF14-0B	8RF18-0B	8RF22-0B	8RF26-0B	8RF30-0B
		8RF6-1B	8RF10-1B	8RF14-1B	8RF18-1B	8RF22-1B	8RF26-1B	8RF30-1B
3'-8" TO 4'-4" PRECAST	1635	1749	3355	3280	4349	5421	6493	7567
		1891	3699	5206	6639	8060	9479	10893
4'-5" TO 4'-6" PRECAST	1494	1596	3063	2992	3968	4946	5924	6904
		1756	3699	5206	6639	8060	9479	10893
4'-7" TO 5'-8" PRECAST	866	920	1770	1716	2277	2839	3402	3966
		1167	2481	4567	6389	8060 (34)	7917 (19)	9311 (19)
5'-9" TO 5'-10" PRECAST	810	859	1653	1600	2124	2649	3174	3700
		1113	2342	4242	6639 (10)	8060 (39)	7402 (19)	8706 (19)
5'-11" TO 6'-8" PRECAST	797	901	1825	3120	5048	7747	9448	7360
		901	1825	3120	5048	7915	9479	10893 (32)
6'-9" TO 7'-6" PRECAST	669	755	1490	2459	3776	5743	7239	5623
		755	1490	2459	3776	5743	8998 (19)	10893 (48)
7'-7" TO 9'-8" PRECAST	411	466	999	1568	2253	3129	4091	3146
		526	999	1568	2253	3129	4150	5891 (47)

CAST-CRETE	UPLIFT							LATERAL		
TYPE OF LINTEL / OVERALL LINTEL LENGTH *	8RF6-1T	8RF10-1T	8RF14-1T	8RF18-1T	8RF22-1T	8RF26-1T	8RF30-1T	8RU6	8RF6	RCMU
	8RF6-2T	8RF10-2T	8RF14-2T	8RF18-2T	8RF22-2T	8RF26-2T	8RF30-2T			
3'-8" TO 4'-4" PRECAST	905	1668	2362	3056	3751	4445	5140	758	757	1164
	905	1668	2362	3056	3751	4445	5140			
4'-5" TO 4'-6" PRECAST	867	1604	2272	2939	3607	4275	4943	694	693	1073
	867	1604	2272	2939	3607	4275	4943			
4'-7" TO 5'-8" PRECAST	675	1269 (16)	1797	2326 (5)	2854 (2)	3382	3911	408	407	655
	675	1269	1797	2326	2854	3382	3911			
5'-9" TO 5'-10" PRECAST	655	1207 (16)	1746 (11)	2259 (7)	2733 (5)	3286 (3)	3799 (1)	382	381	616
	655	1233	1746	2259	2733	3286	3799			
5'-11" TO 6'-8" PRECAST	570	929 (16)	1530 (22)	1980 (19)	2429 (16)	2879 (15)	3329 (14)	595	788	464
	570	1080	1530	1980	2429	2879	3329			
6'-9" TO 7'-6" PRECAST	506	742 (16)	1364 (30)	1765 (27)	2166 (25)	2567 (24)	2968 (23)	509	674	363
	506	898	1364	1765	2166	2567	2968			
7'-7" TO 9'-8" PRECAST	395	468 (15)	884 (32)	1222 (33)	1540 (34)	1859 (34)	2180 (34)	370	490	214
	395	560	1072	1386	1701	2016	2331			

** Note: An “R” in the lintel Type indicates a recess lintel*

© 2015 Cast-Crete USA, Inc.

CAST-CRETE	GRAVITY							
OVERALL LINTEL LENGTH / TYPE OF LINTEL	6U8	6F8-1B	6F12-1B	6F16-1B	6F20-1B	6F24-1B	6F28-1B	6F32-1B
2'-8" TO 3'-6" PRECAST	2332	2676	3892	5050	6148	7227	8297	9357
3'-7" TO 4'-0" PRECAST	2025	2313	3892	5050	6148	7227	8297	9357
4'-1" TO 4'-6" PRECAST	1654	1887	3633	5050	6148	7227	8297	9357
4'-7" TO 5'-10" PRECAST	1067	1260	2198	3557	5734	7227	8297 (31)	8225 (19)
5'-11" TO 6'-6" PRECAST	949	1078	1831	2850	4328	6737	8297	9357
6'-7" TO 7'-6" PRECAST	779	883	1459	2188	3151	4524	6654	9357 (11)
7'-7" TO 9'-4" PRECAST	584	660	1056	1523	2084	2795	3731	5017
9'-5" TO 10'-6" PRECAST	503	566	895	1270	1706	2236	2898	3747
10'-7" TO 11'-4" PRECAST	457	513	805	1133	1507	1952	2492	3163
11'-5" TO 12'-0" PRECAST	425	477	744	1042	1377	1769	2238	2808
12'-1" TO 13'-4" PRECAST	373	417	646	895	1170	1485	1852	2285
13'-5" TO 14'-0" PRECAST	351	392	605	835	1087	1373	1703	2087
14'-1" TO 17'-4" PRECAST	NR	299	455	620	794	985	1198	1437

CAST-CRETE	UPLIFT							LATERAL		
OVERALL LINTEL LENGTH / TYPE OF LINTEL	6F8-1T	6F12-1T	6F16-1T	6F20-1T	6F24-1T	6F28-1T	6F32-1T	6U8	6F8	RCMU
2'-8" TO 3'-6" PRECAST	1412	2074	2715	3356	3997	4638	5279	587	1055	596
3'-7" TO 4'-0" PRECAST	1225	1800	2357	2913	3470	4027	4583	487	787	445
4'-1" TO 4'-6" PRECAST	1083	1592	2084	2577	3069	3562	4055	416	609	344
4'-7" TO 5'-10" PRECAST	831	1222	1600	1979	2357	2736	3114	300	350	198
5'-11" TO 6'-6" PRECAST	723	1097 (9)	1437 (1)	1777	2117	2457	2797	263	496	157
6'-7" TO 7'-6" PRECAST	648 (16)	863 (13)	1249 (14)	1544 (9)	1840 (6)	2135 (4)	2431 (2)	222	367	116
7'-7" TO 9'-4" PRECAST	575	571 (12)	980 (27)	1252 (26)	1492 (24)	1732 (22)	1972 (20)	173	352	74
9'-5" TO 10'-6" PRECAST	514	462 (12)	787 (27)	1121 (33)	1336 (31)	1551 (29)	1766 (28)	151	276	58
10'-7" TO 11'-4" PRECAST	474	404 (11)	685 (26)	985 (33)	1213 (33)	1442 (33)	1645 (32)	139	311	49
11'-5" TO 12'-0" PRECAST	454 (7)	367 (11)	619 (26)	888 (33)	1093 (33)	1299 (33)	1506 (33)	131	277	44
12'-1" TO 13'-4" PRECAST	402 (13)	308 (11)	516 (25)	736 (32)	906 (32)	1076 (32)	1247 (32)	117	223	35
13'-5" TO 14'-0" PRECAST	368 (13)	285 (10)	475 (24)	677 (31)	832 (32)	989 (32)	1145 (32)	111	202	32
14'-1" TO 17'-4" PRECAST	253 (12)	208 (9)	338 (22)	476 (29)	585 (29)	693 (29)	803 (29)	NR	130	21

© 2015 Cast-Crete USA, Inc.

12” PRECAST U-LINTELS SAFE LOADS (LBS/FT)

CAST-CRETE	GRAVITY							
OVERALL LINTEL LENGTH / TYPE OF LINTEL	12U8	12F8-2B	12F12-2B	12F16-2B	12F20-2B	12F24-2B	12F28-2B	12F32-2B
2'-8" TO 3'-6" PRECAST	3428	5000	5838	7619	9352	11060	12755	14438
3'-7" TO 4'-0" PRECAST	2923	4232	5838	7619	9352	11060	12755	14438
4'-1" TO 4'-6" PRECAST	2396	3464	5304	7619	9352	11060	12755	14438
4'-7" TO 5'-10" PRECAST	1612	2320	3218	5234	8487	11060	12755	14438 (11)
5'-11" TO 6'-6" PRECAST	1383	1986	2679	4196	6421	10032	12755	14438 (30)
6'-7" TO 7'-6" PRECAST	1138	1628	2131	3218	4676	6756	9763	13528 (46)
7'-7" TO 9'-4" PRECAST	795	1216	1535	2230	3083	4167	5593	7552 (40)
9'-5" TO 10'-6" PRECAST	614	1043	1295	1853	2516	3323	4334	5632 (38)
10'-7" TO 11'-4" PRECAST	518	945	1162	1649	2216	2893	3719	4746 (38)
11'-5" TO 12'-0" PRECAST	456	878	1073	1513	2020	2617	3333	4206 (39)
12'-1" TO 13'-4" PRECAST	359	767 (8)	926	1294	1709	2188	2743	3409 (42)
13'-5" TO 14'-0" PRECAST	321	720 (12)	865	1204	1584	2017	2451	3106 (43)
14'-1" TO 17'-4" PRECAST	NR	451 (17)	631 (18)	881 (15)	1141 (14)	1428 (14)	1750 (16)	2102 (52)
17'-5" TO 19'-4" PRECAST	NR	343 (17)	477 (19)	700 (19)	925 (20)	1152 (20)	1380 (20)	1609 (54)

CAST-CRETE	UPLIFT							LATERAL		
OVERALL LINTEL LENGTH / TYPE OF LINTEL	12F8-2T	12F12-2T	12F16-2T	12F20-2T	12F24-2T	12F28-2T	12F32-2T	12U8	12F8	RCMU
2'-8" TO 3'-6" PRECAST	2752	4287	5613	6938	8264	9589	10915	1295	4841	3933 (13)
3'-7" TO 4'-0" PRECAST	2389	3721	4872	6023	7174	8325	9477	1295	4841	2994 (14)
4'-1" TO 4'-6" PRECAST	2113	3291	4310	5328	6347	7365	8384	1049	3922	2417 (18)
4'-7" TO 5'-10" PRECAST	1623	2527 (2)	3310	4092	4875	5658	6441	681	2547	1552 (27)
5'-11" TO 6'-6" PRECAST	1444	2269 (12)	2972 (4)	3675	4378	5081	5784	579	2167	1234 (27)
6'-7" TO 7'-6" PRECAST	1267 (14)	1767 (14)	2583 (16)	3194 (12)	3806 (9)	4417 (7)	5028 (5)	474	1771	914 (27)
7'-7" TO 9'-4" PRECAST	1028 (9)	1171 (14)	2006 (28)	2590 (28)	3087 (26)	3583 (24)	4079 (22)	355	1326	580 (27)
9'-5" TO 10'-6" PRECAST	920 (18)	947 (13)	1612 (28)	2281 (34)	2764 (33)	3209 (31)	3653 (30)	306	1143	454 (27)
10'-7" TO 11'-4" PRECAST	858 (24)	829 (13)	1404 (27)	1982 (33)	2441 (33)	2902 (33)	3364 (33)	278	1041	388 (27)
11'-5" TO 12'-0" PRECAST	814 (27)	753 (13)	1269 (27)	1788 (33)	2201 (33)	2616 (33)	3032 (33)	260	971	345 (27)
12'-1" TO 13'-4" PRECAST	678 (27)	633 (12)	1057 (26)	1485 (32)	1826 (32)	2169 (32)	2513 (32)	229	857	278 (27)
13'-5" TO 14'-0" PRECAST	622 (27)	586 (12)	974 (25)	1365 (31)	1679 (31)	1993 (31)	2309 (32)	216	809	251 (27)
14'-1" TO 17'-4" PRECAST	434 (25)	427 (10)	695 (23)	964 (29)	1182 (29)	1402 (29)	1623 (29)	NR	633 (12)	162 (27)
17'-5" TO 19'-4" PRECAST	366 (23)	370 (10)	593 (22)	817 (27)	1002 (27)	1187 (27)	1372 (27)	NR	534 (17)	130 (27)

© 2015 Cast-Crete USA, Inc.

SAFE LOADS (LBS/FT) 12” PRECAST W/2” RECESS DOOR U-LINTELS

CAST-CRETE	GRAVITY							
OVERALL LINTEL LENGTH / TYPE OF LINTEL *	12RU6	12RF6-2B	12RF10-2B	12RF14-2B	12RF18-2B	12RF22-2B	12RF26-2B	12RF30-2B
3'-8" TO 4'-4" PRECAST	2538	2942	5468	7584	9640	11669	13679	15679
4'-5" TO 4'-6" PRECAST	2319	2740	5468	7584	9640	11669	13679	15679
4'-7" TO 5'-8" PRECAST	1347	1841	3555	6395	9640	11669	13679	15679 (24)
5'-9" TO 5'-10" PRECAST	1259	1758	3361	5954	9640	11669	13679	15679 (29)
5'-11" TO 6'-8" PRECAST	924	1430	2633	4415	7075	10353 (16)	12573 (16)	14800 (45)
6'-9" TO 7'-6" PRECAST	703	1203	2157	3494	5329	7922 (16)	9623 (17)	11329 (46)
7'-7" TO 9'-8" PRECAST	389	843	1451 (5)	2239	3203 (9)	4427 (16)	5417 (17)	6380 (47)

CAST-CRETE	UPLIFT							LATERAL		
OVERALL LINTEL LENGTH / TYPE OF LINTEL *	12RF6-2T	12RF10-2T	12RF14-2T	12RF18-2T	12RF22-2T	12RF26-2T	12RF30-2T	12RU6	12RF6	RCMU
3'-8" TO 4'-4" PRECAST	1626	2685	3746	4806	5867	6928	7989	1295	3692	2583 (17)
4'-5" TO 4'-6" PRECAST	1558	2582	3602	4623	5643	6664	7684	1213	3458	2417 (18)
4'-7" TO 5'-8" PRECAST	1210	2042	2850	3658	4466	5273	6081	784	2236	1650 (27)
5'-9" TO 5'-10" PRECAST	1173	1984 (1)	2769	3553	4338	5123	5908	747	2129	1552 (27)
5'-11" TO 6'-8" PRECAST	1020 (4)	1538 (2)	2426 (5)	3114	3802	4489	5177	602	1716	1170 (27)
6'-9" TO 7'-6" PRECAST	904 (15)	1226 (2)	2163 (15)	2776 (10)	3390 (7)	4003 (5)	4617 (3)	504	1438	914 (27)
7'-7" TO 9'-8" PRECAST	703 (14)	771 (2)	1472 (22)	2181 (29)	2663 (26)	3145 (25)	3628 (23)	355	1011	539 (27)

** Note: An “R” in the lintel Type indicates a recess lintel*

© 2015 Cast-Crete USA, Inc.

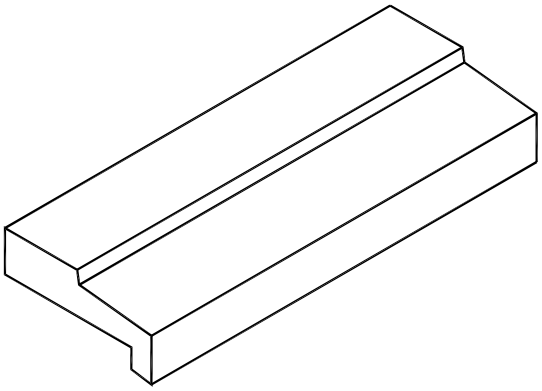

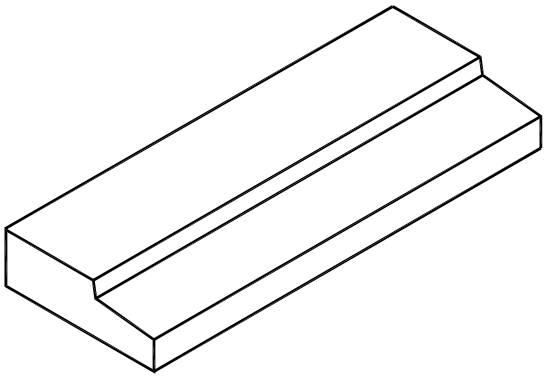

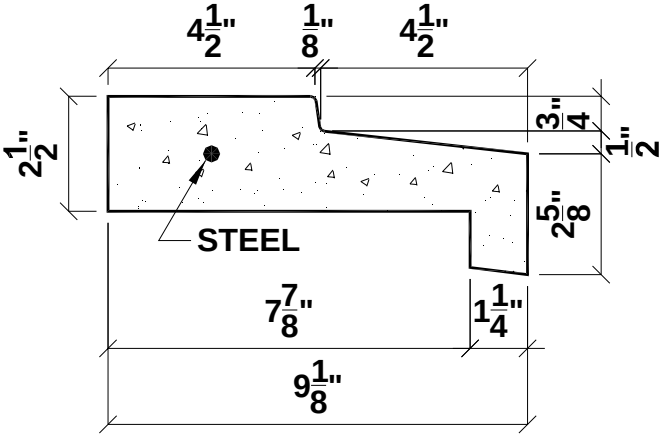

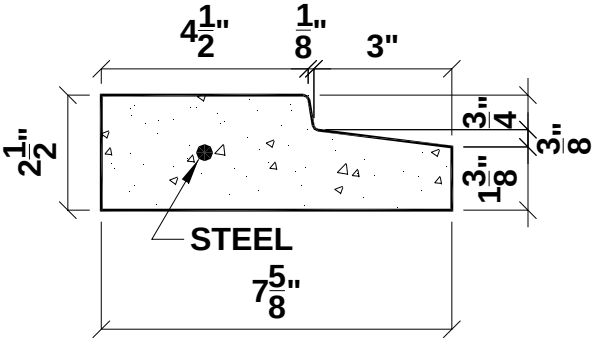

HiWind™ FACE
WIND RESISTANT SILL

HiWind™ FLUSH
WIND RESISTANT SILL

OVERALL LENGTH	*STEEL*
1'-7"	1 - #3 rebar
2'-0"	1 - #3 rebar
2'-2 1/2"	1 - #3 rebar
3'-0"	1 - #3 rebar
3'-1"	1 - #3 rebar
4'-0"	1 - #3 rebar
4'-5"	1 - #3 rebar
5'-0"	1 - #3 rebar
6'-0"	1 - #3 rebar
6'-2"	1 - #3 rebar

Rebar: ASTM A615 Grade 60
Concrete Strength: f'c=3000 psi
Finish: Grey Block
Average Self Weight for Wind Resistant Face Sill: 18 plf
Average Self Weight for Wind Resistant Flush Sill: 16 plf

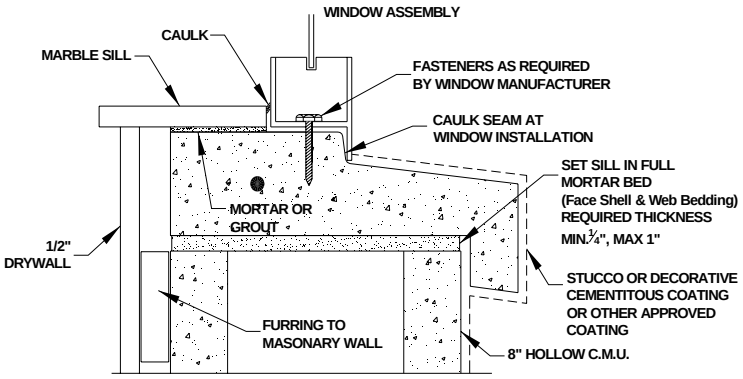

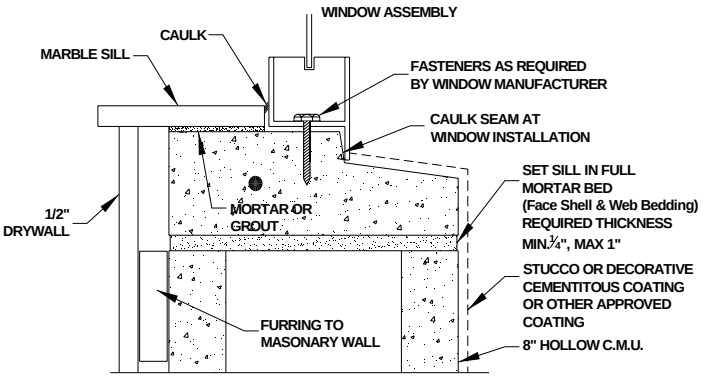

TYPICAL INSTALLATION

© 2015 Cast-Crete USA, Inc.

ENGINEERED FOR WIND LOADS AND IMPACT TESTED

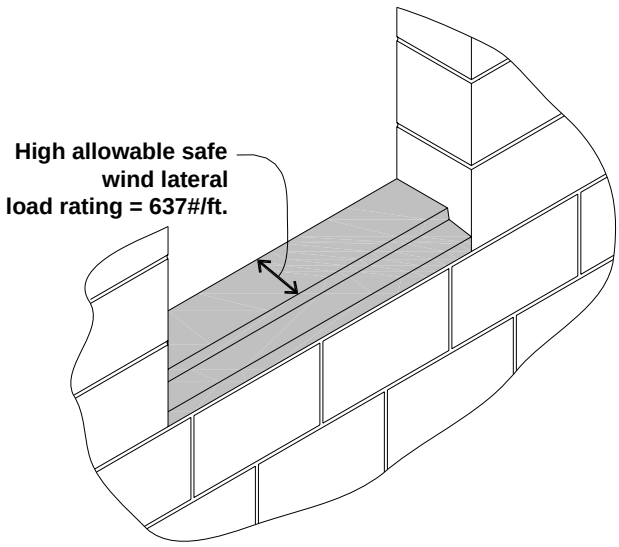

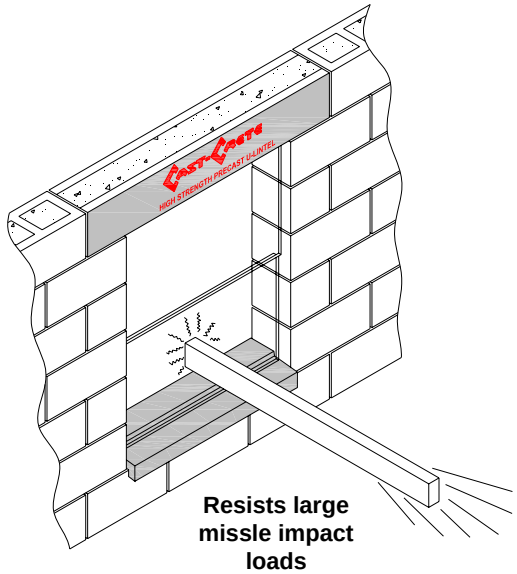

DURABLE

- Machine-made, ensuring uniform dimensions.
- 3000psi concrete exceeds minimum block strength.
- Water dam and sloped face direct water away from window assembly helping to prevent water intrusion.

FINISH

- Our grey block finish bonds better to mortar, stucco and paint than a smooth concrete finish.

ECONOMICAL

- Eliminates costly cast-in-place sills.
- Eliminates the need for a lower window buck.
- 3” setback of window provides deflection clearance for storm shutters.

WIND RATED

- Safe allowable wind lateral load of 637#/ft based on ACI 530 when set in a full bed of type M or S mortar on 8” hollow C.M.U.

IMPACT TESTED

- Resists impact loads from large missile (9 pound missile @ 50 feet per second) per TAS 201, SSTD 12 and ASTM E1886/E1996. All test performed by a Miami-Dade accredited laboratory.

DO NOT USE

Cast in place sills with a wood buck do not have a water stop to help prevent water intrusion into the building. Water intrusion is the #1 cause of mold growth.

© 2015 Cast-Crete USA, Inc.

HiDri® PRECAST SILL

DURABLE

- Machine-made, ensuring uniform dimensions.
- 3000psi concrete exceeds minimum block strength.
- Water dam and sloped face direct water away from window assembly helping to prevent water intrusion.
- Additional water dam @ interior side of window assembly for added protection against water

FINISH

- Our grey block finish bonds better to mortar, stucco and paint than a smooth concrete finish.

ECONOMICAL

- Eliminates costly cast-in-place sills.
- Eliminates the need for a lower window buck.
- 3” setback of window provides deflection clearance for storm shutters.

WIND RATED

- Safe allowable wind lateral load of 637#/ft based on ACI 530 when set in a full bed of type M or S mortar on 8” hollow C.M.U.

IMPACT TESTED

- Resists impact loads from large missile (9 pound missile @ 50 feet per second) per TAS 201, SSTD 12 and ASTM E1886/E1996. All test performed by a Miami-Dade accredited laboratory.

Rebar: ASTM A615 Grade 60
Concrete Strength: 3000 psi
Average Self Weight: 17 plf
Finish: Grey Block

OVERALL LENGTH	*STEEL*
1’-7”	1 - #3 rebar
2’-0”	1 - #3 rebar
2’-2 1/2”	1 - #3 rebar
3’-0”	1 - #3 rebar
3’-1”	1 - #3 rebar
4’-0”	1 - #3 rebar
4’-5”	1 - #3 rebar
5’-0”	1 - #3 rebar
6’-0”	1 - #3 rebar
6’-2”	1 - #3 rebar

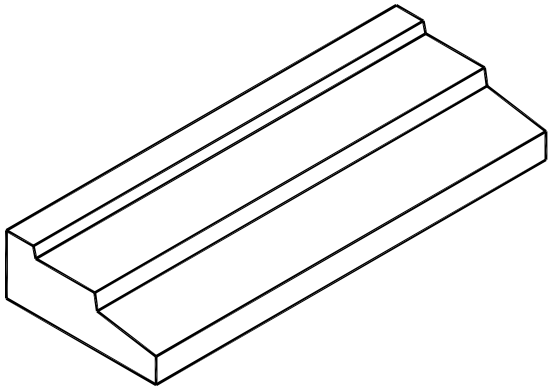

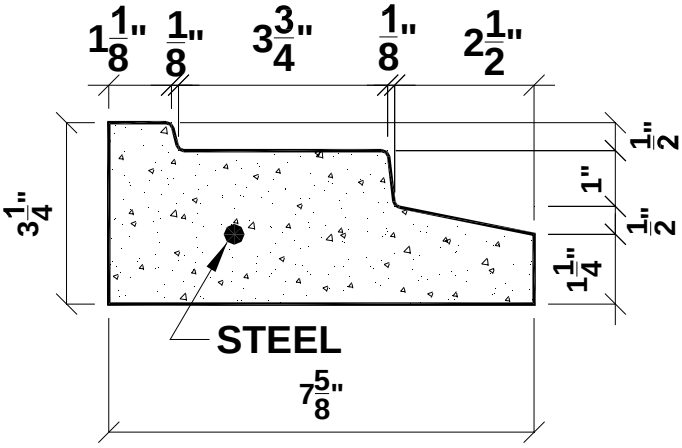

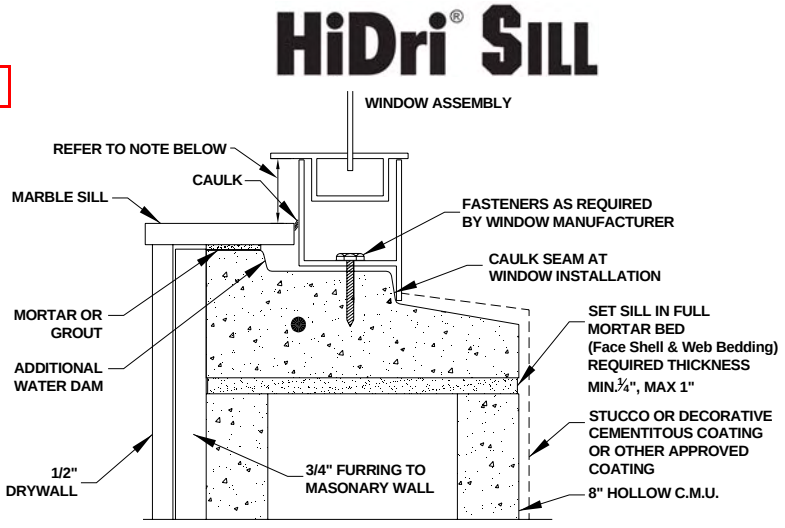

NOTE:
FOR USE WITH WINDOW FRAMES 3" OR LESS IN WIDTH. COORDINATE WITH THE WINDOW MANUFACTURER TO INSURE ADEQUATE CLEARANCE FOR USE OF LOCKS, LIFT RAIL AND CRANK HANDLE.

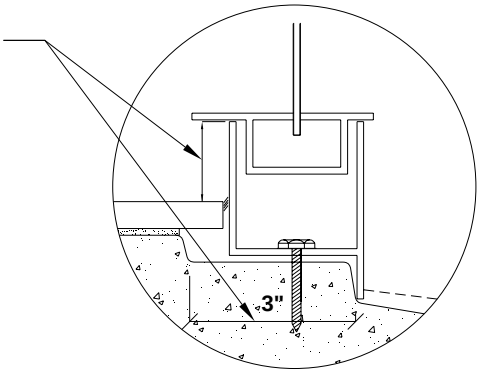

TYPICAL INSTALLATION

© 2015 Cast-Crete USA, Inc.

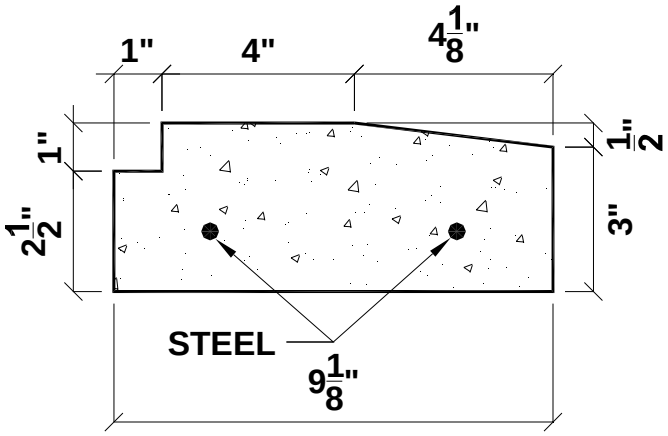

SWING DOOR THRESHOLD

OVERALL LENGTH	*STEEL*
2'-11 1/2"	2 - #3 rebar
3'-3 1/2"	2 - #3 rebar
5'-4"	2 - #3 rebar
6'-3"	2 - #3 rebar

Rebar: ASTM A615 Grade 60
Concrete Strength: 3000 psi
Average Self Weight: 28 plf
Finish: Grey Block

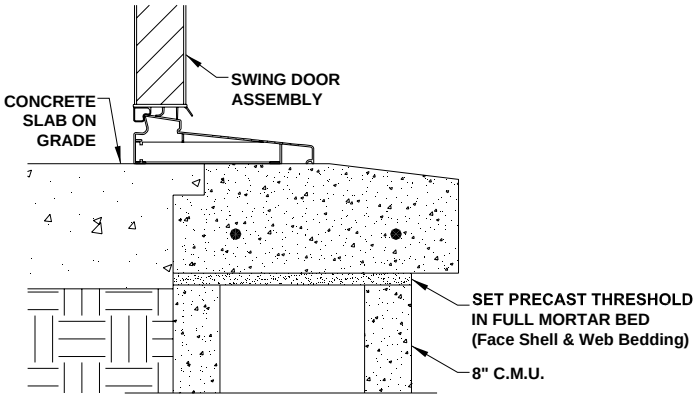

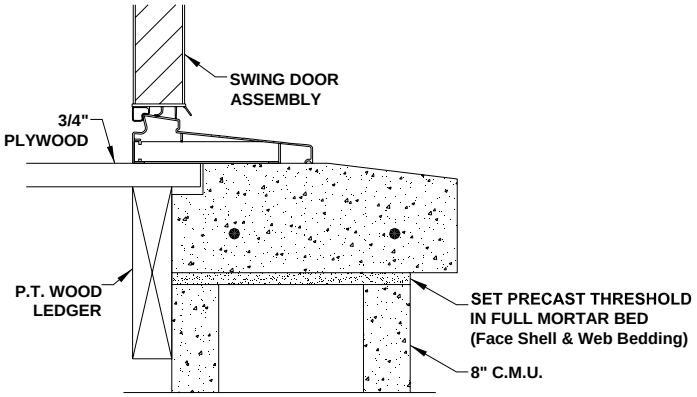

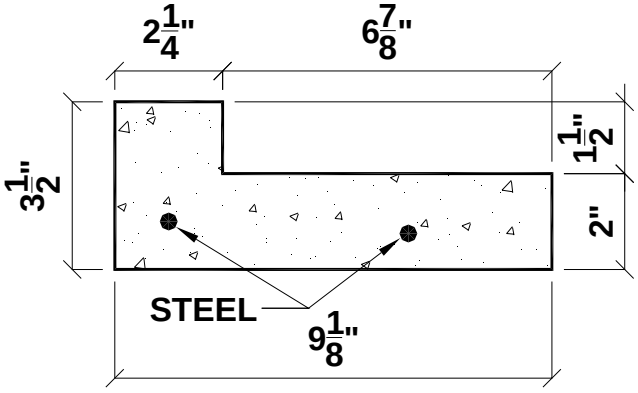

SLIDING GLASS DOOR THRESHOLD

OVERALL LENGTH	*STEEL*
4'-0"	2 - #3 rebar
5'-0"	2 - #3 rebar
6'-0"	2 - #3 rebar
8'-0"	2 - #3 rebar

Rebar: ASTM A615 Grade 60
Concrete Strength: 3000 psi
Average Self Weight: 20 plf
Finish: Grey Block

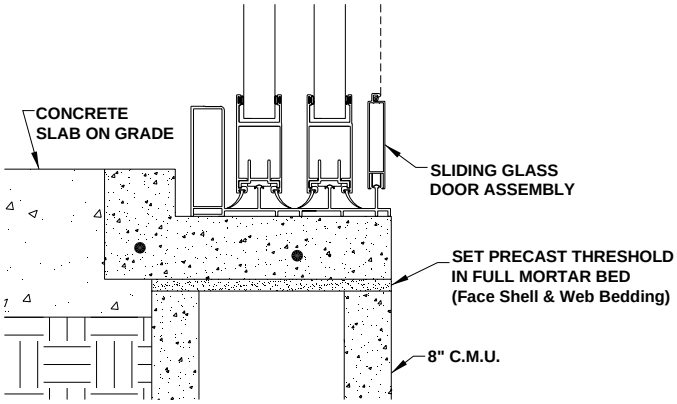

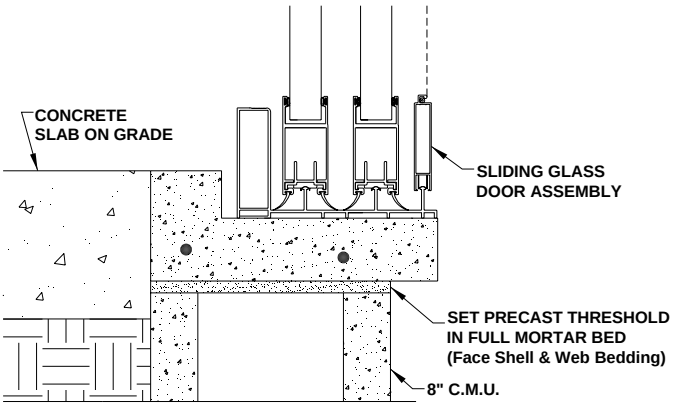

TYPICAL USE

© 2015 Cast-Crete USA, Inc.

PRECAST SCUPPERS

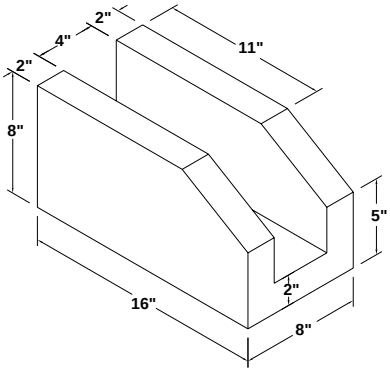

8” SCUPPER

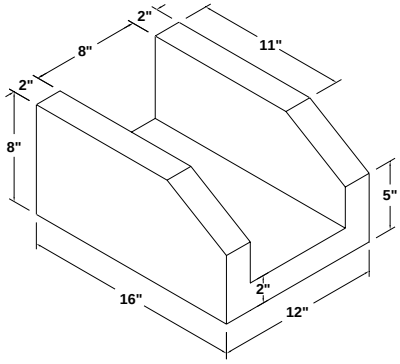

12” SCUPPER

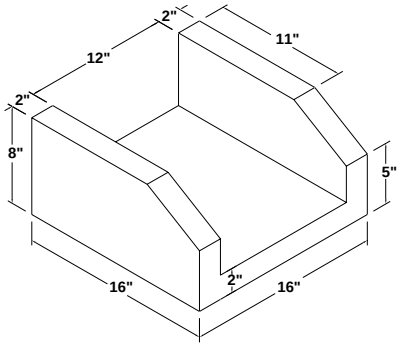

16” SCUPPER

Concrete Strength: 6000 psi
Synthetic Fibers: 2.5 lbs/yd
Average Self Weights:
8" Scupper = 50 lbs
12" Scupper = 60 lbs
16" Scupper = 70 lbs
Finish: Grey Smooth Form

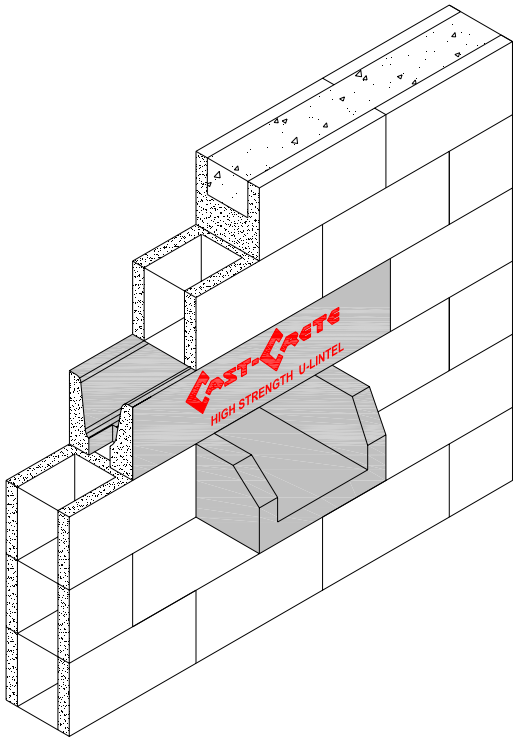

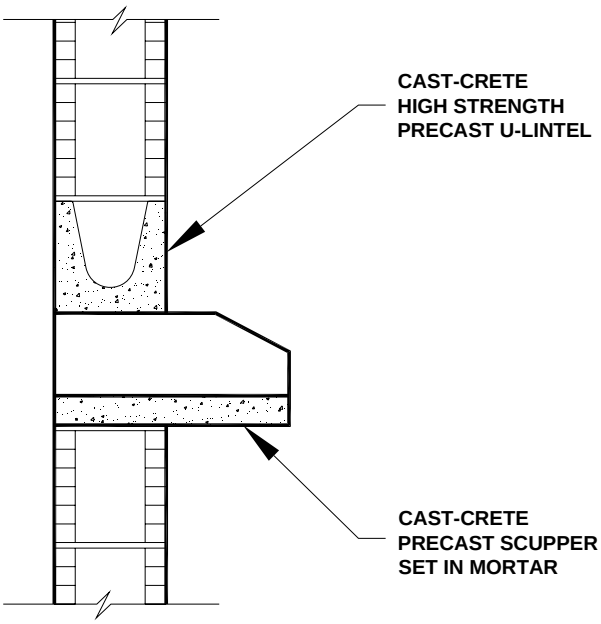

TYPICAL INSTALLATION

© 2015 Cast-Crete USA, Inc.

HEAVY DUTY PRECAST PARKING BUMPERS

OVERALL LENGTH	*STEEL*
3’-0”	2 - #3 rebar
6’-0”	2 - #3 rebar

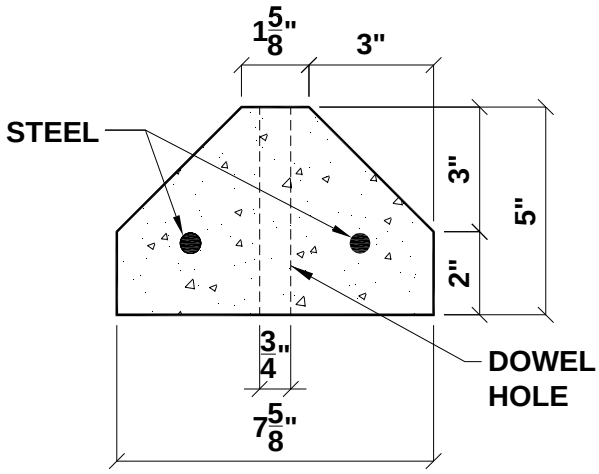

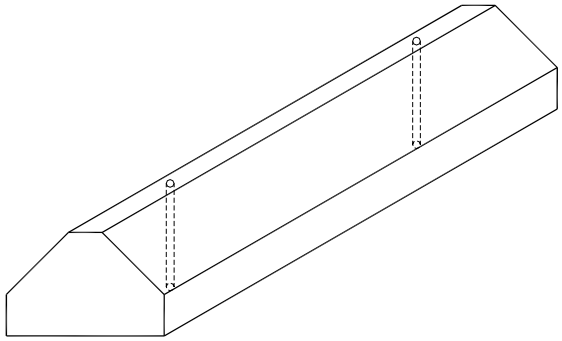

Rebar: ASTM A615 Grade 60
Concrete Strength: 4000 psi
Average Self Weights:
3'-0" Bumper = 81 lbs
6'-0" Bumper = 162 lbs
Finish: Sand / Grey Block

TYPICAL INSTALLATION

STEP: 1 Remove any debris from area where parking bumper is to be placed. (Grass, dirt, oil, etc.)

STEP: 2 Make sure parking bumper is located on a level surface.

STEP: 3 Place parking bumper in specified location.

STEP: 4 Drive the pins into the parking surface until the top of pin is at a minimum flush with top of parking bumper.

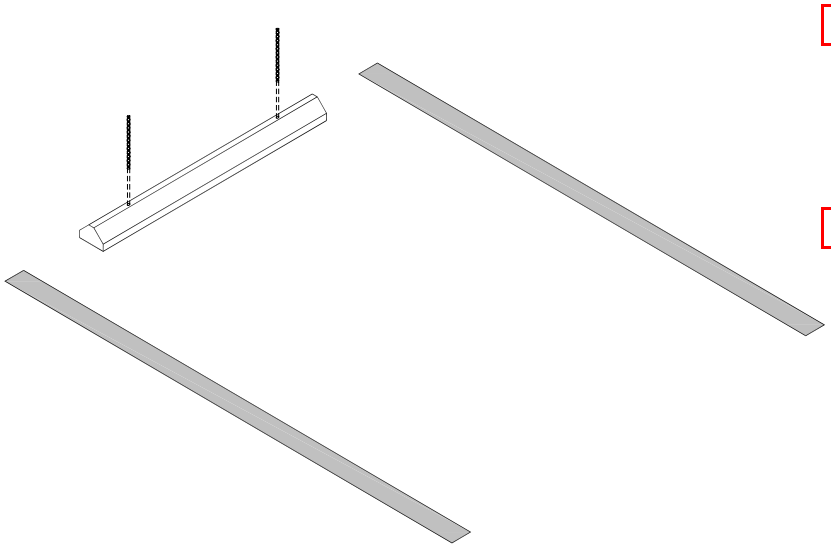

DURABLE

- Our parking bumpers are Machine-made, ensuring uniform dimensions and proper placement of the reinforcing steel.

FINISH

- Grey block texture. Paint adheres better than a smooth concrete finish.

ECONOMICAL

- 5” height provides clearance for bumpers and air dams on low profile cars. Available in 3’-0” & 6’-0” lengths.

SPECIFICATIONS

- Machine made with 4,000 P.S.I. concrete. Reinforcing consists of two #3 deformed steel bars. Dowel holes are cast-in to receive a one foot length of #4 rebar anchor rod. Two anchor rods are supplied with each parking bumper.

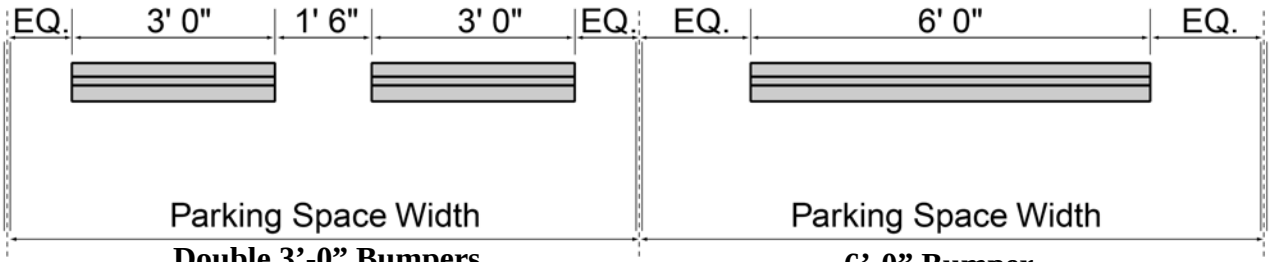

Double 3’-0” Bumpers **6’-0” Bumper**

© 2015 Cast-Crete USA, Inc.

4” PRECAST SOLID LINTELS *STANDARD LENGTHS*

OVERALL LENGTH	*TOP STEEL*	*BOTTOM STEEL*
3’-4”	1 -#3 rebar	1 -#3 rebar
3’-6”	1 -#3 rebar	1 -#3 rebar
4’-0”	1 -#3 rebar	1 -#3 rebar
4’-6”	1 -#3 rebar	1 -#3 rebar
4’-8”	1 -#3 rebar	1 -#3 rebar
5’-4”	1 -#3 rebar	1 -#3 rebar
5’-10”	1 -#3 rebar	1 -#3 rebar
6’-0”	1 -#3 rebar	1 -#3 rebar
6’-6”	1 -#3 rebar	1 -#3 rebar
6’-8”	1 -#3 rebar	1 -#3 rebar
7’-4”	1 -#3 rebar	1 -#3 rebar
7’-6”	1 -#3 rebar	1 -#3 rebar
8’-0”	1 -#3 rebar	1 -#3 rebar
8’-8”	1 -#3 rebar	1 -#3 rebar
9’-4”	1 -#3 rebar	1 -#3 rebar
10’-0”	1 -#3 rebar	1 -#3 rebar
10’-6”	1 -#3 rebar	1 -#3 rebar

Additional lengths available by special order

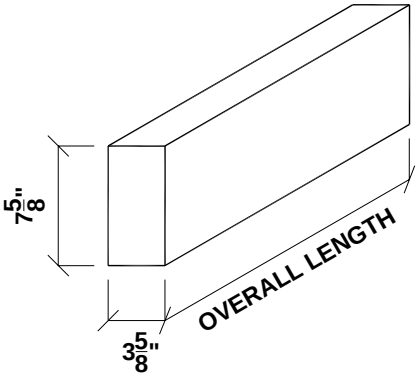

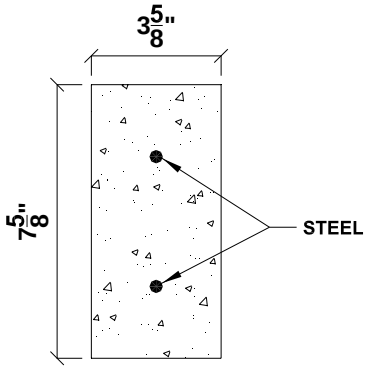

LINTEL TYPE 4S8

NOTE: INSTALL LINTEL WITH 7 5/8” DIMENSION VERTICAL

Rebar: ASTM A615 Grade 60
Concrete Strength: 3000 psi
Average Self Weight: 26 plf
Finish: Grey Block

4” SOLID LINTELS SAFE LOADS (LBS/FT)

CAST-CRETE		GRAVITY	UPLIFT	LATERAL
OVERALL LINTEL LENGTH \ TYPE OF LINTEL		4S8	4S8	4S8
2'-8" TO 3'-6"	PRECAST	1180	687	371
3'-7" TO 4'-0"	PRECAST	959	597	320
4'-1" TO 4'-6"	PRECAST	789	529	258
4'-7" TO 5'-10"	PRECAST	460	407	148
5'-11" TO 6'-6"	PRECAST	360	366	118
6'-7" TO 7'-6"	PRECAST	260	280	87
7'-7" TO 9'-4"	PRECAST	156	187	55
9'-5" TO 10'-6"	PRECAST	116	152	43

© 2015 Cast-Crete USA, Inc.

LINTEL DATA SHEETS
APPENDIX A

The following LINTEL DATA SHEETS are intended for the use by qualified design professionals to assist in the building design when using precast concrete lintels manufactured by CAST-CRETE. The information provided is applicable to and only to lintels manufactured by Cast-Crete. Therefore, it is recommended that the construction documents explicitly specify the use of Cast-Crete lintels with no substitutions allowed. The substitution of lintels manufactured by other than Cast-Crete may result in a deficient and unsafe structure.

The LINTEL DATA SHEETS contain the following information for Gravity, Wind Uplift, and Wind Lateral loads:

SAFE LOAD - Safe allowable superimposed uniform load in units of pounds per linear foot.

MOMENT - Safe allowable superimposed moment in units of foot-pounds.

SHEAR - Safe allowable superimposed shear in units of pounds.

Additionally, GRAVITY LOAD / DEFLECTION GRAPHS are provided to assist in the evaluation of lintel

DATA SHEET INDEX

8 INCH U-LINTEL LENGTHS

2’-8” TO 3’-6” …….…….. A2
3’-7” TO 4’-0” …….. A3
4’-1” TO 4’-6” …….. A4
4’-7” TO 5’-4” …….. A5
5’-5” TO 5’-10” ……..…. A6
5’-11” TO 6’-6” ……..…. A7
6’-7” TO 7’-6” ……..…. A8
7’-7” TO 9’-4” ……..…. A9
9’-5” TO 10’-6” ……..…. A10
10’-7” TO 11’-4” …….. A11
11’-5” TO 12’-0” …….. A12
12’-1” TO 13’-4” …….. A13
13’-5” TO 14’-0” …….. A14
14’-1” TO 14’-8” …….. A15
14’-9” TO 15’-4” …….. A16
15’-5” TO 17’-4” …….. A17
17’-5” TO 19’-4” …….. A18
19’-5” TO 21’-4” …….. A19
21’-5” TO 22’-0” …….. A20
22’-1” TO 24’-0” …….. A21

8 INCH RECESS U-LINTEL LENGTHS

3’-8” TO 4’-4” ……... A22
4’-5” TO 4’-6” ……..…. A23
4’-7” TO 5’-8” ……..…. A24
5’-9” TO 5’-10” ……..…. A25
5’-11” TO 6’-8” ……..…. A26
6’-9” TO 7’-6” ……..…. A27
7’-7” TO 9’-8” ……..…. A28

12 INCH U-LINTEL LENGTHS

2’-8” TO 3’-6” …….…….. A29
3’-7” TO 4’-0” ……..…… A30
4’-1” TO 4’-6” ……..…… A31
4’-7” TO 5’-10” …….. A32
5’-11” TO 6’-6” ……..…. A33
6’-7” TO 7’-6” ……..…. A34
7’-7” TO 9’-4” ……..…. A35
9’-5” TO 10’-6” ……..…. A36
10’-7” TO 11’-4” ……..…. A37
11’-5” TO 12’-0” ……..…… A38
12’-1” TO 13’-4” ……..…… A39
13’-5” TO 14’-0” ……..…… A40
14’-1” TO 17’-4” ……..…… A41
17’-5” TO 19’-4” ……..…… A42

12 INCH RECESS U-LINTEL LENGTHS

3’-8” TO 4’-4” ……... A43
4’-5” TO 4’-6” ……..…. A44
4’-7” TO 5’-8” ……..…. A45
5’-9” TO 5’-10” ……..…. A46
5’-11” TO 6’-8” ……..…. A47
6’-9” TO 7’-6” ……..…. A48
7’-7” TO 9’-8” ……..…. A49

6 INCH U-LINTEL LENGTHS

2’-8” TO 3’-6” …….…….. A50
3’-7” TO 4’-0” ……..…… A51
4’-1” TO 4’-6” ……..…… A52
4’-7” TO 5’-10” …….. A53
5’-11” TO 6’-6” ……..…. A54
6’-7” TO 7’-6” ……..…. A55
7’-7” TO 9’-4” ……..…. A56
9’-5” TO 10’-6” ……..…. A57
10’-7” TO 11’-4” ……..…. A58
11’-5” TO 12’-0” ……..…… A59
12’-1” TO 13’-4” ……..…… A60
13’-5” TO 14’-0” ……..…… A61
14’-1” TO 17’-4” ……..…… A62

4 INCH SOLID LINTEL LENGTHS

2’-8” TO 10’-6” …….…….. A63

© 2015 Cast-Crete USA, Inc.

8 INCH U-LINTEL LENGTHS 2'-8" TO 3'-6"

DATA SHEET

	U-LINTEL TYPE	8U8	8F8-0B / 8F8-1B	8F12-0B / 8F12-1B	8F16-0B / 8F16-1B	8F20-0B / 8F20-1B	8F24-0B / 8F24-1B	8F28-0B / 8F28-1B	8F32-0B / 8F32-1B
GRAVITY	SAFE LOAD (LBS/FT)	2231	3069 / 3069	3719 / 4605	5163 / 6113	6607 / 7547	8054 / 8974	9502 / 10394	10951 / 11809
	MOMENT (FT-LB)	4144	4329 / 8763 (16)	4662 / 15266 (17)	6472 / 21841 (18)	8282 / 28423 (46)	10095 / 23280 (18)	11911 / 27685 (19)	13727 / 32097 (19)
	SHEAR (LBS)	2200	3017 / 3017	4557 / 4557	6089 / 6089	7547 / 7547	8974 / 8974	10394 / 10394	11809 / 11809

	U-LINTEL TYPE	8U8	8F8-1T / 8F8-2T	8F12-1T / 8F12-2T	8F16-1T / 8F16-2T	8F20-1T / 8F20-2T	8F24-1T / 8F24-2T	8F28-1T / 8F28-2T	8F32-1T / 8F32-2T
UPLIFT	SAFE LOAD (LBS/FT)	NR	1569 / 1569	2655 / 2655	3524 / 3524	4394 / 4394	5263 / 5263	6132 / 6132	7001 / 7001
	MOMENT (FT-LB)	NR	4765 (31) / 8698 (29)	6373 (28) / 7934	10435 (37) / 14097 (11)	13598 (37) / 21513 (24)	16781 (37) / 30039 (32)	19977 (37) / 38582 (37)	23184 (37) / 44848 (37)
	SHEAR (LBS)	NR	2485 / 2485	4205 / 4205	5581 / 5581	6957 / 6957	8334 / 8334	9710 / 9710	11087 / 11087

	U-LINTEL TYPE	8U8	8F8	RCMU
LATERAL	SAFE LOAD (LBS/FT)	1025	1024	1598
	MOMENT (FT-LB)	1283	1283	2328
	SHEAR (LBS)	1293	2621	1806

2'-8" TO 3'-6" HIGH STRENGTH LINTEL GRAVITY LOAD / DEFLECTION GRAPH

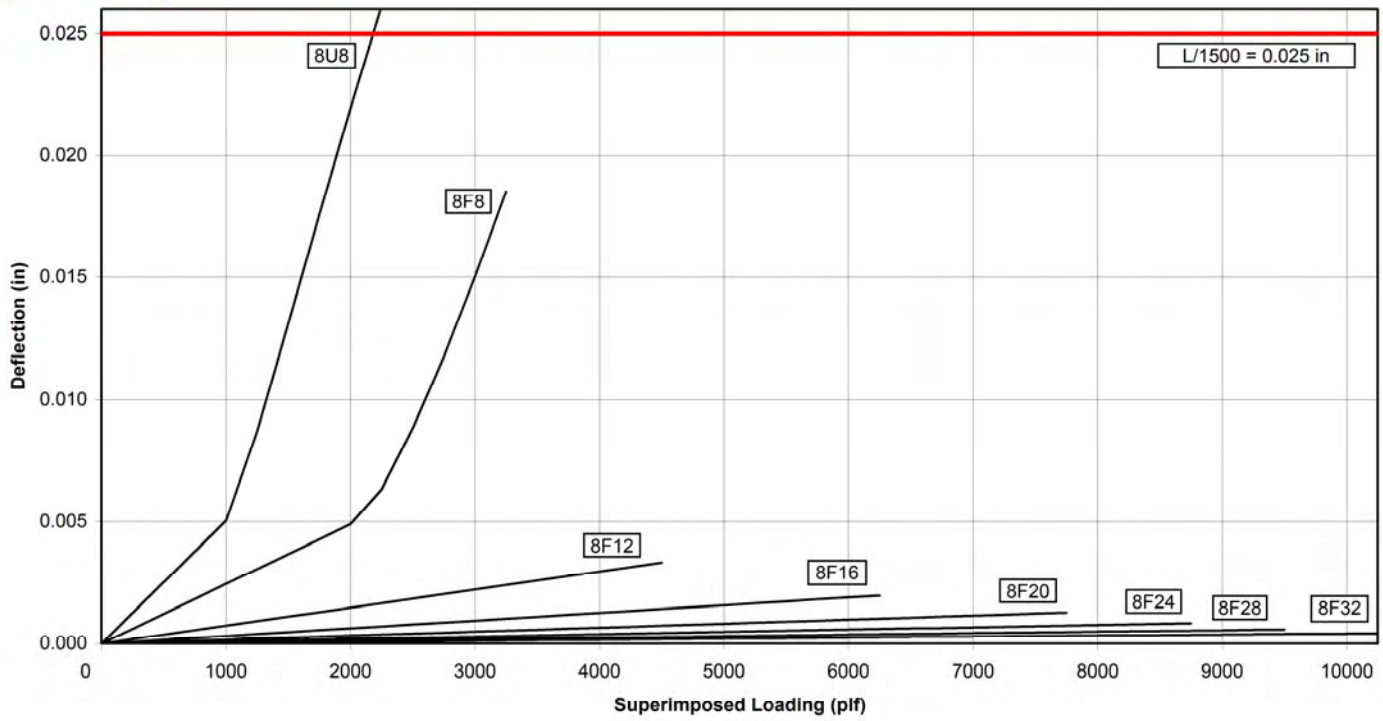

© 2015 Cast-Crete USA, Inc.

8 INCH U-LINTEL LENGTHS 3'-7" TO 4'-0"

DATA SHEET

	U-LINTEL TYPE	8U8	8F8-0B / 8F8-1B	8F12-0B / 8F12-1B	8F16-0B / 8F16-1B	8F20-0B / 8F20-1B	8F24-0B / 8F24-1B	8F28-0B / 8F28-1B	8F32-0B / 8F32-1B
GRAVITY	SAFE LOAD (LBS/FT)	1966	2561 / 2693	2751 / 4605	3820 / 6113	4890 / 7547	5961 / 8974	7034 / 10394	8107 / 11809
	MOMENT (FT-LB)	4129	4303 / 8737 (16)	4624 / 15228 (17)	6420 / 21789 (18)	8218 / 28359 (46)	10019 / 23204 (19)	11821 / 27595 (19)	13625 / 31995 (19)
	SHEAR (LBS)	2191	3002 / 3002	4535 / 4535	6059 / 6059	7547 / 7547	8974 / 8974	10394 / 10394	11809 / 11809

	U-LINTEL TYPE	8U8	8F8-1T / 8F8-2T	8F12-1T / 8F12-2T	8F16-1T / 8F16-2T	8F20-1T / 8F20-2T	8F24-1T / 8F24-2T	8F28-1T / 8F28-2T	8F32-1T / 8F32-2T
UPLIFT	SAFE LOAD (LBS/FT)	NR	1363 / 1363	2305 / 2305	3060 / 3060	3815 / 3815	4570 / 4570	5325 / 5325	6079 / 6079
	MOMENT (FT-LB)	NR	4791 (31) / 8724 (29)	6412 (28) / 7972	10486 (37) / 14148 (11)	13662 (37) / 21577 (24)	16857 (37) / 30116 (32)	20066 (37) / 38672 (37)	23286 (37) / 44951 (37)
	SHEAR (LBS)	NR	2500 / 2500	4227 / 4227	5611 / 5611	6995 / 6995	8379 / 8379	9763 / 9763	11147 / 11147

	U-LINTEL TYPE	8U8	8F8	RCMU
LATERAL	SAFE LOAD (LBS/FT)	765	763	1309
	MOMENT (FT-LB)	1283	1283	2328
	SHEAR (LBS)	1293	2621	1806

3'-7" TO 4'-0" HIGH STRENGTH LINTEL GRAVITY LOAD / DEFLECTION GRAPH

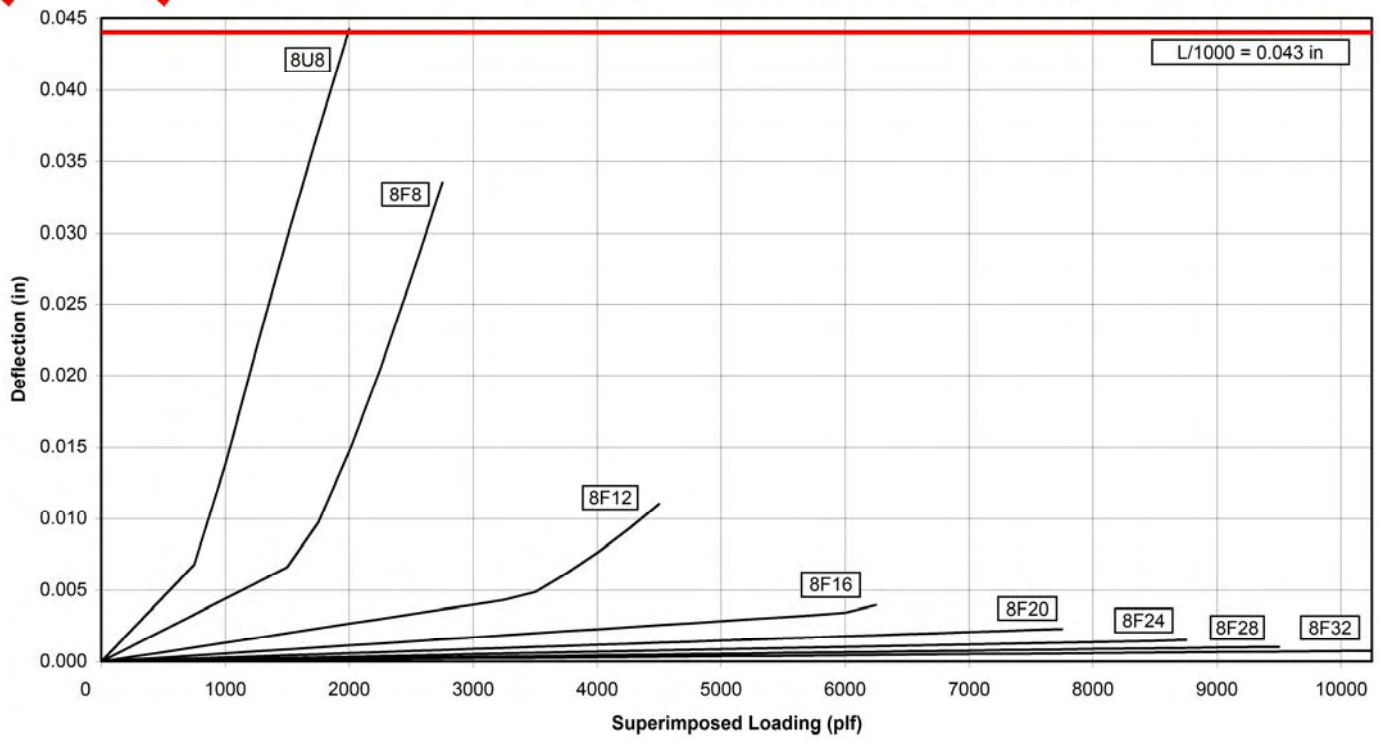

© 2015 Cast-Crete USA, Inc.

8 INCH U-LINTEL LENGTHS 4'-1" TO 4'-6"

DATA SHEET

	U-LINTEL TYPE	8U8	8F8-0B 8F8-1B	8F12-0B 8F12-1B	8F16-0B 8F16-1B	8F20-0B 8F20-1B	8F24-0B 8F24-1B	8F28-0B 8F28-1B	8F32-0B 8F32-1B
GRAVITY	SAFE LOAD (LBS/FT)	1599	1969	2110	2931	3753	4576	5400	6224
			2189	4375	6113	7547 (7)	8672	10294	11809
	MOMENT (FT-LB)	4111	4274	4580	6362	8144	9930	11718	13507
			8708 (16)	15184 (17)	21731 (18)	28285 (46)	23115 (19)	27492 (19)	31877 (19)
	SHEAR (LBS)	2182	2987	4512	6029	7492	8968	10394	11809
			2987	4512	6029	7492	8968	10394	11809

	U-LINTEL TYPE	8U8	8F8-1T 8F8-2T	8F12-1T 8F12-2T	8F16-1T 8F16-2T	8F20-1T 8F20-2T	8F24-1T 8F24-2T	8F28-1T 8F28-2T	8F32-1T 8F32-2T
UPLIFT	SAFE LOAD (LBS/FT)	NR	1207	2040	2707	3375	4043	4711	5379
			1207	2040	2707	3375	4043	4711	5379
	MOMENT (FT-LB)	NR	4820 (31)	6456 (27)	10545 (37)	13736 (37)	16946 (37)	20169 (37)	23404 (37)
			8753 (29)	8017	14207 (11)	21650 (24)	30204 (32)	38775 (37)	45068 (37)
	SHEAR (LBS)	NR	2515	4250	5641	7032	8424	9815	11207
			2515	4250	5641	7032	8424	9815	11207

	U-LINTEL TYPE	8U8	8F8	RCMU
LATERAL	SAFE LOAD (LBS/FT)	592	591	1073
	MOMENT (FT-LB)	1283	1283	2328
	SHEAR (LBS)	1293	2621	1806

4'-1" TO 4'-6" HIGH STRENGTH LINTEL GRAVITY LOAD / DEFLECTION GRAPH

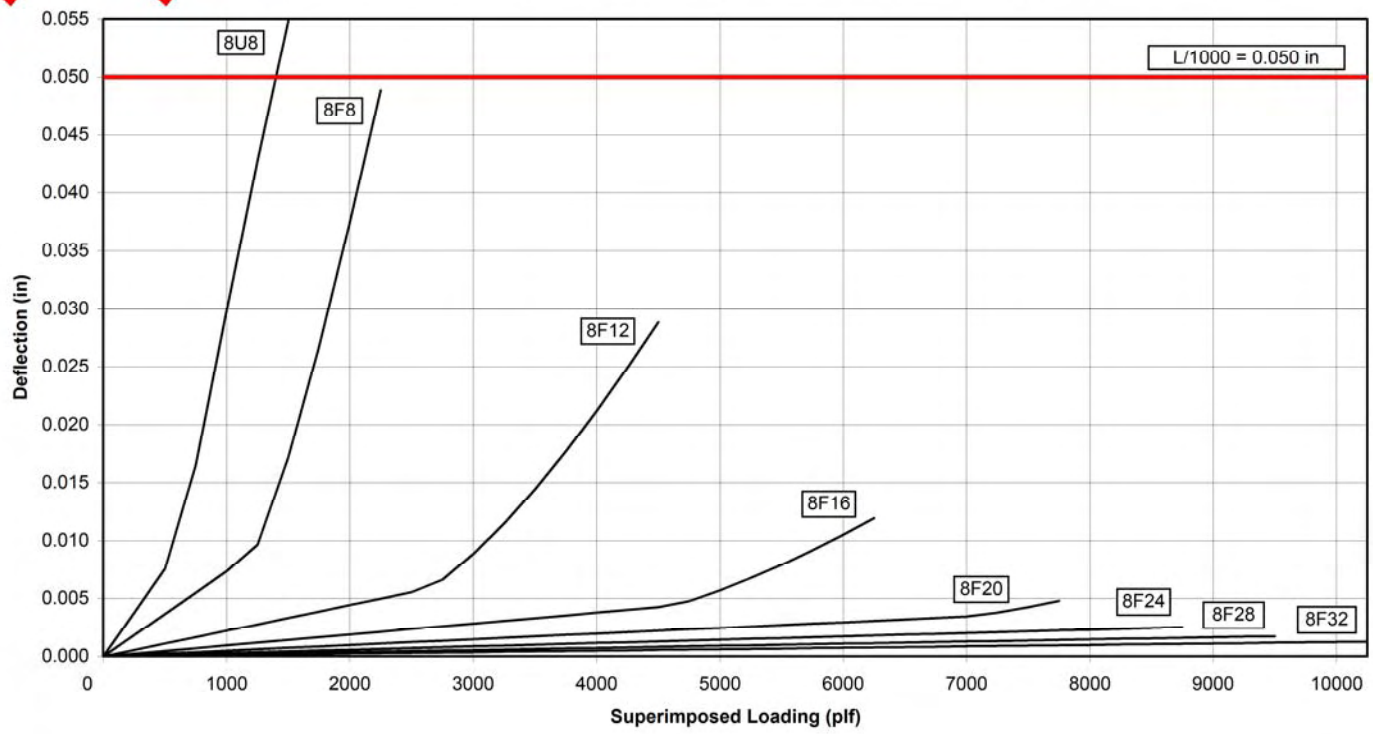

© 2015 Cast-Crete USA, Inc.

8 INCH U-LINTEL LENGTHS 4'-7" TO 5'-4"

DATA SHEET

	U-LINTEL TYPE	8U8	8F8-0B 8F8-1B	8F12-0B 8F12-1B	8F16-0B 8F16-1B	8F20-0B 8F20-1B	8F24-0B 8F24-1B	8F28-0B 8F28-1B	8F32-0B 8F32-1B
GRAVITY	SAFE LOAD (LBS/FT)	1217	1349	1438	1999	2560	3123	3686	4249
			1663	3090	5365	7547 (36)	7342 (19)	8733 (19)	10127 (19)
	MOMENT (FT-LB)	4077	4217	4494	6247	8001	9759	11518	13278
			8651 (16)	15098 (17)	21616 (18)	28142 (46)	22944 (19)	27292 (19)	31648 (19)
	SHEAR (LBS)	2167	2962	4475	5979	7430	8893	10370	11809
			2962	4475	5979	7430	8893	10370	11809

	U-LINTEL TYPE	8U8	8F8-1T 8F8-2T	8F12-1T 8F12-2T	8F16-1T 8F16-2T	8F20-1T 8F20-2T	8F24-1T 8F24-2T	8F28-1T 8F28-2T	8F32-1T 8F32-2T
UPLIFT	SAFE LOAD (LBS/FT)	NR	1016	1715 (11)	2276 (4)	2838	3399	3961	4522
			1016	1715	2276	2838	3399	3961	4522
	MOMENT (FT-LB)	NR	4878 (30)	6542 (27)	10660 (36)	13879 (36)	17117 (36)	20370 (36)	23633 (36)
			8811 (29)	8102	14322 (11)	21794 (23)	30376 (32)	38975 (37)	45297 (37)
	SHEAR (LBS)	NR	2540	4287	5691	7095	8499	9903	11307
			2540	4287	5691	7095	8499	9903	11307

	U-LINTEL TYPE	8U8	8F8	RCMU
LATERAL	SAFE LOAD (LBS/FT)	411	411	745
	MOMENT (FT-LB)	1283	1283	2328
	SHEAR (LBS)	1293	2621	1806

4'-7" TO 5'-4" HIGH STRENGTH LINTEL GRAVITY LOAD / DEFLECTION GRAPH

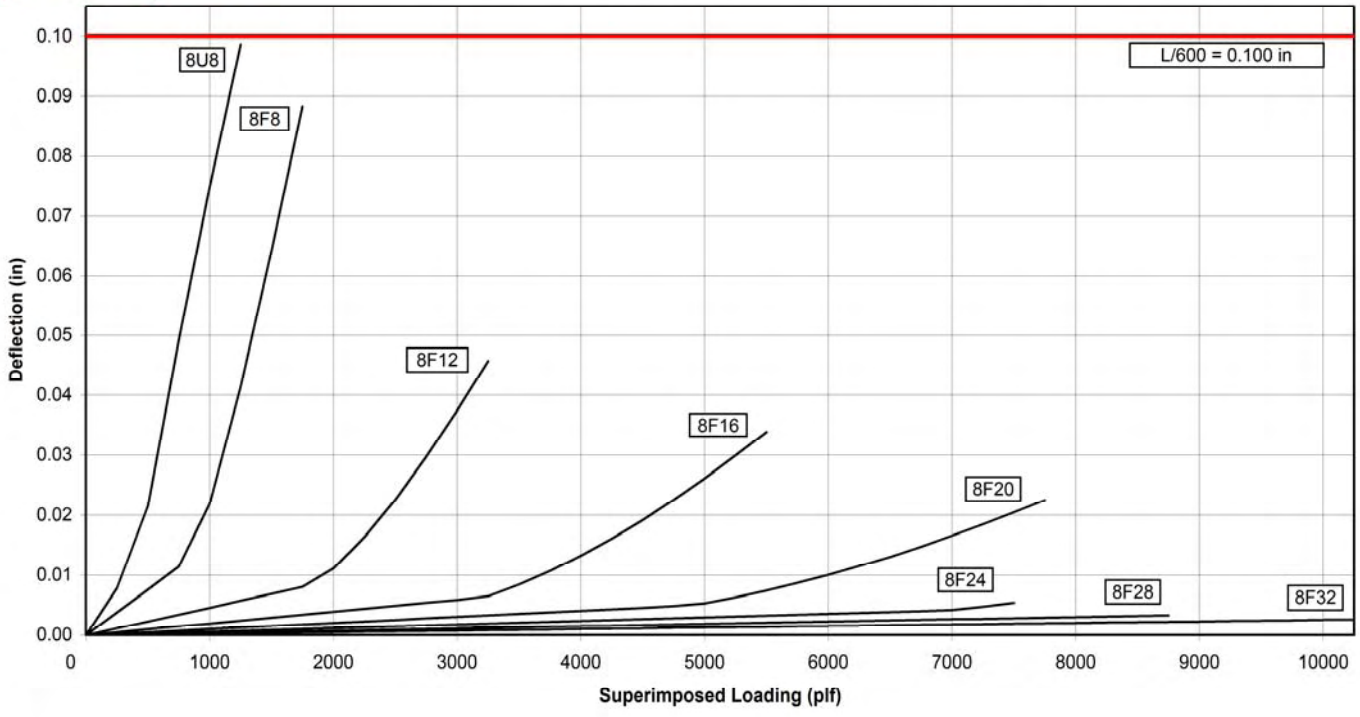

© 2015 Cast-Crete USA, Inc.

8 INCH U-LINTEL LENGTHS 5'-5" TO 5'-10"

DATA SHEET

	U-LINTEL TYPE	8U8	8F8-0B 8F8-1B	8F12-0B 8F12-1B	8F16-0B 8F16-1B	8F20-0B 8F20-1B	8F24-0B 8F24-1B	8F28-0B 8F28-1B	8F32-0B 8F32-1B
GRAVITY	SAFE LOAD (LBS/FT)	1062	1105 1451	1173 2622	1631 4360	2090 7168 (45)	2549 6036 (19)	3009 7181 (19)	3470 8328 (20)
	MOMENT (FT-LB)	4053	4177 8611 (16)	4435 15039 (17)	6168 21537 (18)	7903 28044 (46)	9640 22825 (19)	11380 27154 (19)	13121 31491 (19)
	SHEAR (LBS)	2158	2947 2947	4452 4452	5949 5949	7392 7392	8848 8848	10317 10317	11802 11802

	U-LINTEL TYPE	8U8	8F8-1T 8F8-2T	8F12-1T 8F12-2T	8F16-1T 8F16-2T	8F20-1T 8F20-2T	8F24-1T 8F24-2T	8F28-1T 8F28-2T	8F32-1T 8F32-2T
UPLIFT	SAFE LOAD (LBS/FT)	NR	909 929	1567 (18) 1567	2080 (13) 2080	2593 (9) 2593	3107 (6) 3107	3620 (4) 3620	4133 (3) 4133
	MOMENT (FT-LB)	NR	4917 (30) 8850 (29)	6601 (27) 8162	10738 (36) 14401 (11)	13977 (36) 21892 (23)	17236 (36) 30494 (32)	20508 (36) 39113 (37)	23791 (36) 45455 (37)
	SHEAR (LBS)	NR	2555 2555	4310 4310	5721 5721	7132 7132	8544 8544	9955 9955	11367 11367

	U-LINTEL TYPE	8U8	8F8	RCMU
LATERAL	SAFE LOAD (LBS/FT)	340	339	616
	MOMENT (FT-LB)	1283	1283	2328
	SHEAR (LBS)	1293	2621	1806

5'-5" TO 5'-10" HIGH STRENGTH LINTEL GRAVITY LOAD / DEFLECTION GRAPH

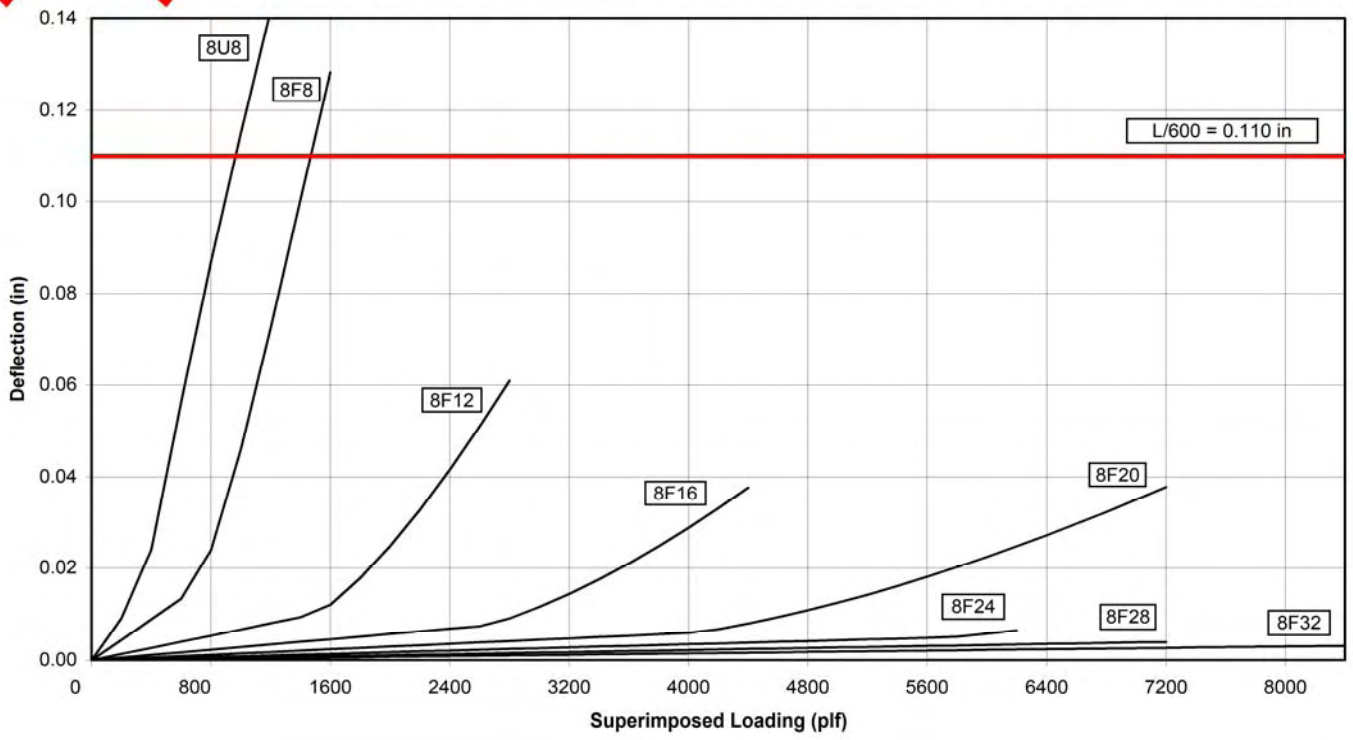

© 2015 Cast-Crete USA, Inc.

8 INCH U-LINTEL LENGTHS 5'-11" TO 6'-6"

DATA SHEET

	U-LINTEL TYPE	8U8	8F8-0B / 8F8-1B	8F12-0B / 8F12-1B	8F16-0B / 8F16-1B	8F20-0B / 8F20-1B	8F24-0B / 8F24-1B	8F28-0B / 8F28-1B	8F32-0B / 8F32-1B
GRAVITY	SAFE LOAD (LBS/FT)	908	1238 1238	2177 2177	3480 3480	3031 5381	3707 8360	4383 10394 (37)	5061 8825 (14)
	MOMENT (FT-LB)	6508	7403 11341 (11)	12230 19880 (12)	17097 28546 (13)	14408 37228 (13)	17619 45957 (14)	20836 54716 (43)	24057 41950 (14)
	SHEAR (LBS)	2146	2927 2927	4422 4422	5909 5909	7342 7342	8788 8788	10247 10247	11722 11722

	U-LINTEL TYPE	8U8	8F8-1T / 8F8-2T	8F12-1T / 8F12-2T	8F16-1T / 8F16-2T	8F20-1T / 8F20-2T	8F24-1T / 8F24-2T	8F28-1T / 8F28-2T	8F32-1T / 8F32-2T
UPLIFT	SAFE LOAD (LBS/FT)	NR	835 (12) 835	1407 (26) 1407	1868 (21) 1868	2329 (18) 2329	2790 (16) 2790	3251 (14) 3251	3712 (12) 3712
	MOMENT (FT-LB)	NR	4975 (30) 8908 (28)	6688 (26) 8249	10855 (36) 14517 (11)	14123 (36) 22038 (23)	17411 (36) 30669 (32)	20712 (36) 39317 (37)	24024 (36) 45688 (37)
	SHEAR (LBS)	NR	2575 2575	4340 4340	5761 5761	7182 7182	8604 8604	10025 10025	11447 11447

	U-LINTEL TYPE	8U8	8F8	RCMU
LATERAL	SAFE LOAD (LBS/FT)	507	721	490
	MOMENT (FT-LB)	3428	3428	2328
	SHEAR (LBS)	1293	2621	1806

5'-11" TO 6'-6" HIGH STRENGTH LINTEL GRAVITY LOAD / DEFLECTION GRAPH

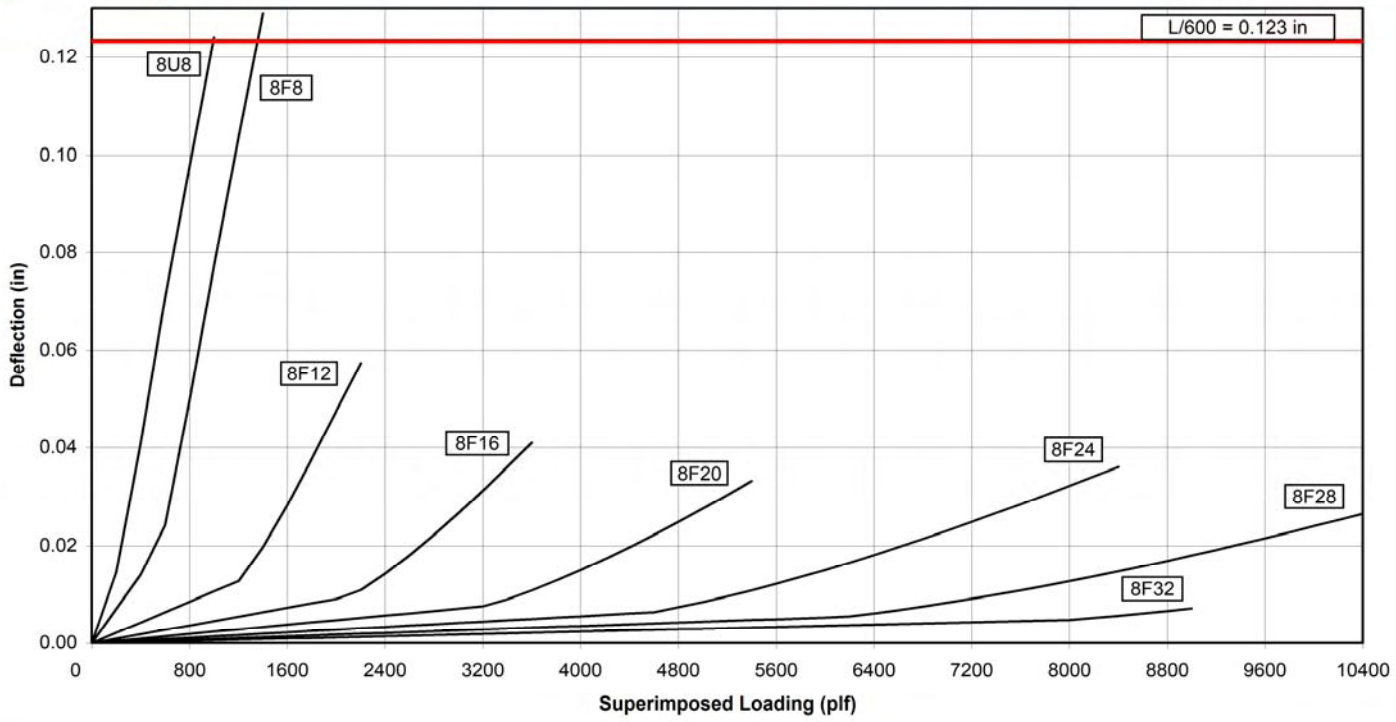

8 INCH U-LINTEL LENGTHS 6'-7" TO 7'-6"

DATA SHEET

	U-LINTEL TYPE	8U8	8F8-0B 8F8-1B	8F12-0B 8F12-1B	8F16-0B 8F16-1B	8F20-0B 8F20-1B	8F24-0B 8F24-1B	8F28-0B 8F28-1B	8F32-0B 8F32-1B
GRAVITY	SAFE LOAD (LBS/FT)	743	1011 1011	1729 1729	2632 2661	2205 3898	2698 5681	3191 8467 (44)	3685 6472 (15)
	MOMENT (FT-LB)	6448	7303 11241 (11)	12080 19730 (12)	16897 28346 (13)	14158 36978 (13)	17319 45657 (14)	20486 54366 (43)	23657 41550 (14)
	SHEAR (LBS)	2128	2897 2897	4377 4377	5849 5849	7267 7267	8698 8698	10142 10142	11602 11602

	U-LINTEL TYPE	8U8	8F8-1T 8F8-2T	8F12-1T 8F12-2T	8F16-1T 8F16-2T	8F20-1T 8F20-2T	8F24-1T 8F24-2T	8F28-1T 8F28-2T	8F32-1T 8F32-2T
UPLIFT	SAFE LOAD (LBS/FT)	NR	727 (23) 727	1065 (26) 1224	1624 (31) 1624	2025 (28) 2025	2426 (26) 2426	2827 (25) 2827	3228 (24) 3228
	MOMENT (FT-LB)	NR	5075 (29) 9008 (28)	6838 (26) 8399	11055 (35) 14717 (10)	14373 (35) 22288 (23)	17711 (35) 30969 (31)	21062 (35) 39667 (36)	24424 (35) 46088 (36)
	SHEAR (LBS)	NR	2605 2605	4385 4385	5821 5821	7257 7257	8694 8694	10130 10130	11567 11567

	U-LINTEL TYPE	8U8	8F8	RCMU
LATERAL	SAFE LOAD (LBS/FT)	424	534	363
	MOMENT (FT-LB)	3428	3428	2328
	SHEAR (LBS)	1293	2621	1806

6'-7" TO 7'-6" HIGH STRENGTH LINTEL GRAVITY LOAD / DEFLECTION GRAPH

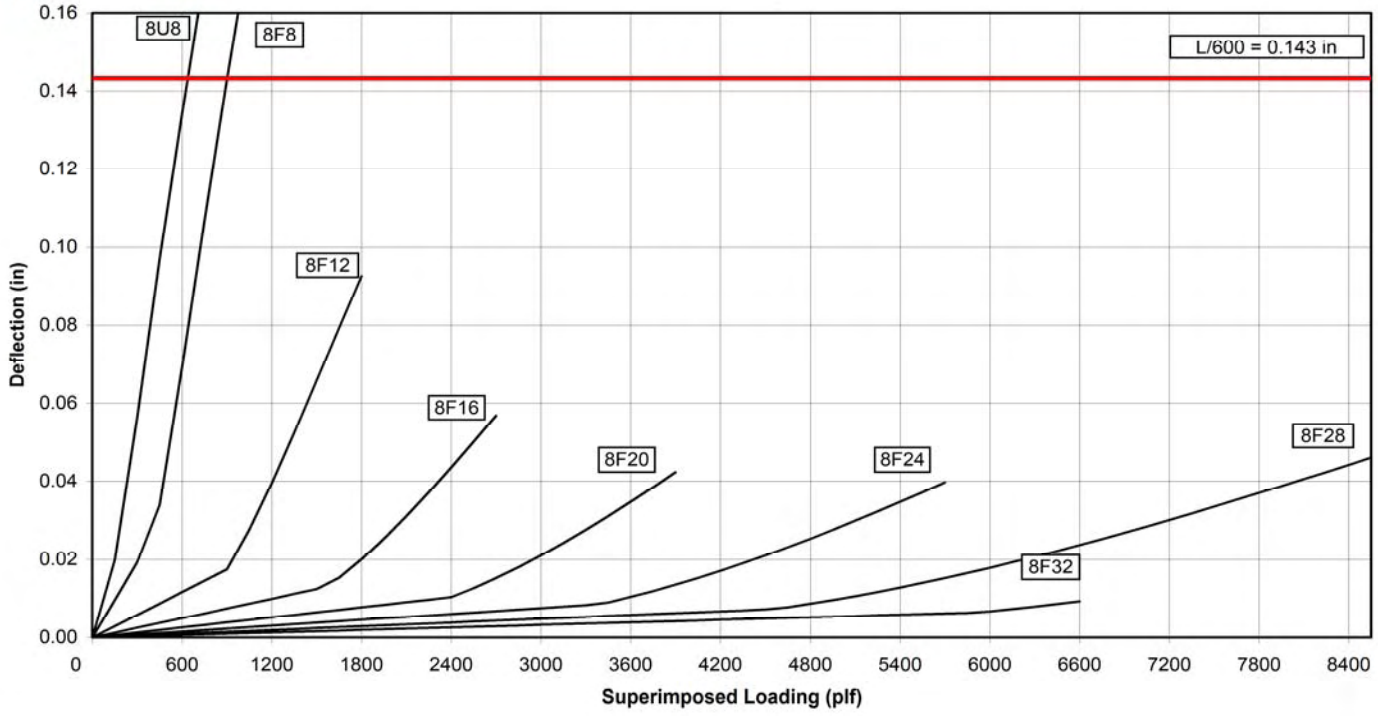

© 2015 Cast-Crete USA, Inc.

8 INCH U-LINTEL LENGTHS 7'-7" TO 9'-4"

DATA SHEET

	U-LINTEL TYPE	8U8	8F8-0B 8F8-1B	8F12-0B 8F12-1B	8F16-0B 8F16-1B	8F20-0B 8F20-1B	8F24-0B 8F24-1B	8F28-0B 8F28-1B	8F32-0B 8F32-1B
GRAVITY	SAFE LOAD (LBS/FT)	554	699 752	1160 1245	1625 1843	2564 2564	3486 3486	2818 4705 (37)	3302 6390 (47)
	MOMENT (FT-LB)	6315	7081 11019 (11)	11747 19397 (13)	16452 27901 (13)	28926 36422 (14)	36384 44991 (14)	28534 53588 (44)	33430 77326 (55)
	SHEAR (LBS)	2095	2842 2842	4295 4295	5739 5739	7130 7130	8533 8533	9950 9950	11382 11382

	U-LINTEL TYPE	8U8	8F8-1T 8F8-2T	8F12-1T 8F12-2T	8F16-1T 8F16-2T	8F20-1T 8F20-2T	8F24-1T 8F24-2T	8F28-1T 8F28-2T	8F32-1T 8F32-2T
UPLIFT	SAFE LOAD (LBS/FT)	NR	591 591	708 (25) 862	1136 (34) 1318	1474 (34) 1643	1815 (34) 1969	2157 (34) 2294	2500 (34) 2619
	MOMENT (FT-LB)	NR	8167 (16) 11564 (19)	7172 (25) 8733	11500 (34) 15162 (10)	14929 (34) 22844 (22)	18377 (34) 31636 (31)	21840 (34) 40445 (36)	25313 (34) 46977 (36)
	SHEAR (LBS)	NR	2660 2660	4467 4467	5931 5931	7395 7395	8859 8859	10323 10323	11787 11787

	U-LINTEL TYPE	8U8	8F8	RCMU
LATERAL	SAFE LOAD (LBS/FT)	326	512	230
	MOMENT (FT-LB)	5180	5180	2328
	SHEAR (LBS)	1293	2621	1806

7'-7" TO 9'-4" HIGH STRENGTH LINTEL GRAVITY LOAD / DEFLECTION GRAPH

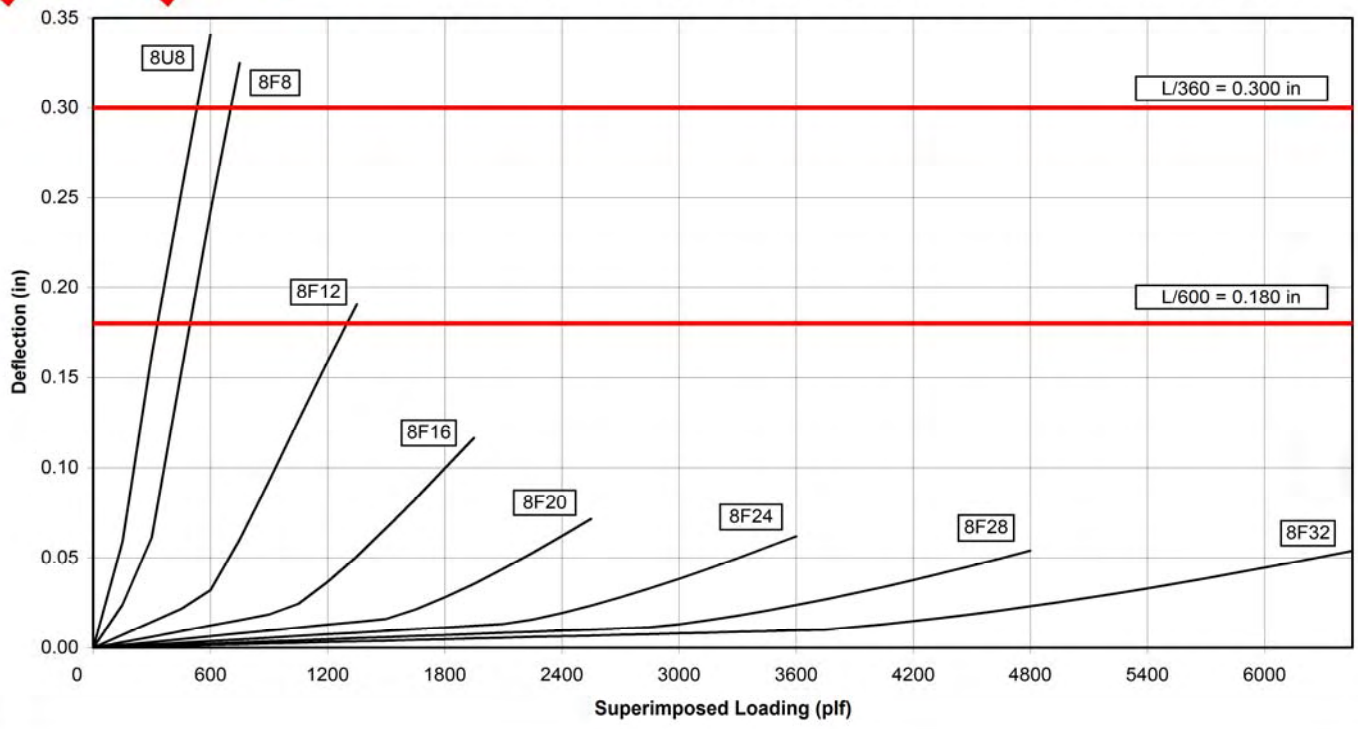

© 2015 Cast-Crete USA, Inc.

8 INCH U-LINTEL
LENGTHS 9'-5" TO 10'-6"

DATA SHEET

	U-LINTEL TYPE	8U8	8F8-0B	8F12-0B	8F16-0B	8F20-0B	8F24-0B	8F28-0B	8F32-0B
			8F8-1B	8F12-1B	8F16-1B	8F20-1B	8F24-1B	8F28-1B	8F32-1B
GRAVITY	SAFE LOAD (LBS/FT)	475	535	890	1247	2093	2777	2163	2536
			643	1052	1533	2093	2781	3643 (38)	4754 (45)
	MOMENT (FT-LB)	6214	6913	11495	16117	28507	35880	27947	32759
			10851 (11)	19145 (13)	27566 (13)	36003 (14)	44487 (14)	53001 (44)	76655 (55)
	SHEAR (LBS)	2074	2807	4242	5669	7042	8428	9827	11242
			2807	4242	5669	7042	8428	9827	11242

	U-LINTEL TYPE	8U8	8F8-1T	8F12-1T	8F16-1T	8F20-1T	8F24-1T	8F28-1T	8F32-1T
			8F8-2T	8F12-2T	8F16-2T	8F20-2T	8F24-2T	8F28-2T	8F32-2T
UPLIFT	SAFE LOAD (LBS/FT)	NR	530	575 (24)	916 (33)	1188 (33)	1461 (33)	1736 (33)	2011 (33)
			530	695	1180 (8)	1472 (4)	1763 (2)	2055	2346
	MOMENT (FT-LB)	NR	8334 (16)	7423 (24)	11835 (33)	15348 (33)	18881 (33)	22427 (33)	25984 (33)
			11731 (19)	8984	15497 (10)	23263 (22)	32139 (30)	41032 (35)	47648 (35)
	SHEAR (LBS)	NR	2695	4520	6001	7482	8964	10445	11927
			2695	4520	6001	7482	8964	10445	11927

	U-LINTEL TYPE	8U8	8F8	RCMU
LATERAL	SAFE LOAD (LBS/FT)	284	401	180
	MOMENT (FT-LB)	5180	5180	2328
	SHEAR (LBS)	1293	2621	1806

9'-5" TO 10'-6" HIGH STRENGTH LINTEL GRAVITY LOAD / DEFLECTION GRAPH

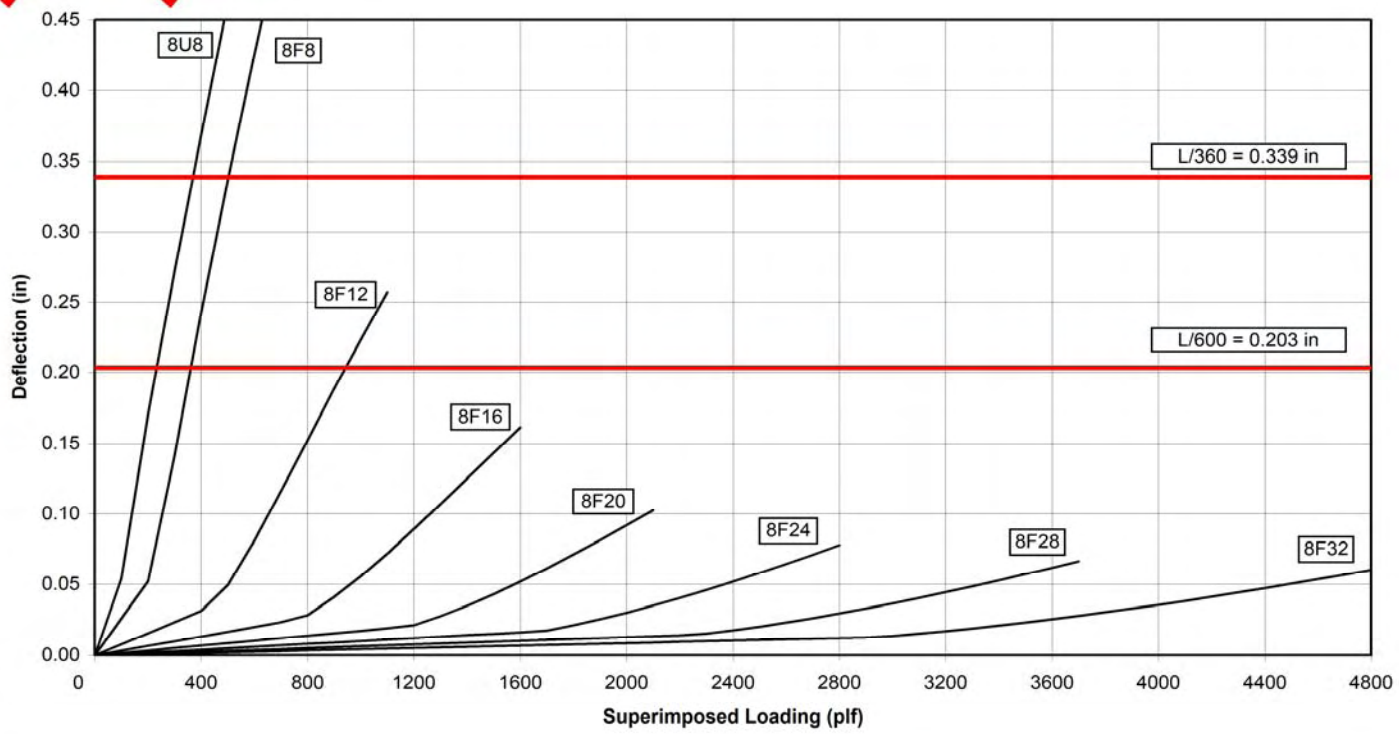

© 2015 Cast-Crete USA, Inc.

8 INCH U-LINTEL LENGTHS 10'-7" TO 11'-4"

DATA SHEET

	U-LINTEL TYPE	8U8	8F8-0B	8F12-0B	8F16-0B	8F20-0B	8F24-0B	8F28-0B	8F32-0B
			8F8-1B	8F12-1B	8F16-1B	8F20-1B	8F24-1B	8F28-1B	8F32-1B
GRAVITY	SAFE LOAD (LBS/FT)	362	582	945	1366	1846	2423	3127	4006
			582	945	1366	1846	2423	3127	4006
	MOMENT (FT-LB)	8472	10405	17567	24826	39300	49316	59372	69456
			13738 (7)	24527 (9)	35533 (10)	46566 (10)	57683 (10)	68849 (10)	80049 (11)
	SHEAR (LBS)	1731	2782	4205	5619	6980	8353	9740	11142
			2782	4205	5619	6980	8353	9740	11142

	U-LINTEL TYPE	8U8	8F8-1T	8F12-1T	8F16-1T	8F20-1T	8F24-1T	8F28-1T	8F32-1T
			8F8-2T	8F12-2T	8F16-2T	8F20-2T	8F24-2T	8F28-2T	8F32-2T
UPLIFT	SAFE LOAD (LBS/FT)	NR	474	504 (23)	800 (32)	1037 (32)	1274 (32)	1513 (32)	1753 (32)
			494	607	1042 (10)	1372 (11)	1643 (8)	1915 (6)	2187 (5)
	MOMENT (FT-LB)	NR	8467 (15)	7622 (23)	12100 (32)	15679 (32)	19277 (32)	22890 (32)	26513 (32)
			11864 (18)	9183	15762 (10)	23594 (22)	32536 (30)	41495 (35)	48177 (35)
	SHEAR (LBS)	NR	2720	4557	6051	7545	9039	10533	12027
			2720	4557	6051	7545	9039	10533	12027

	U-LINTEL TYPE	8U8	8F8	RCMU
LATERAL	SAFE LOAD (LBS/FT)	260	452	154
	MOMENT (FT-LB)	6836	6836	2328
	SHEAR (LBS)	1293	2621	1806

10'-7" TO 11'-4" HIGH STRENGTH LINTEL GRAVITY LOAD / DEFLECTION GRAPH

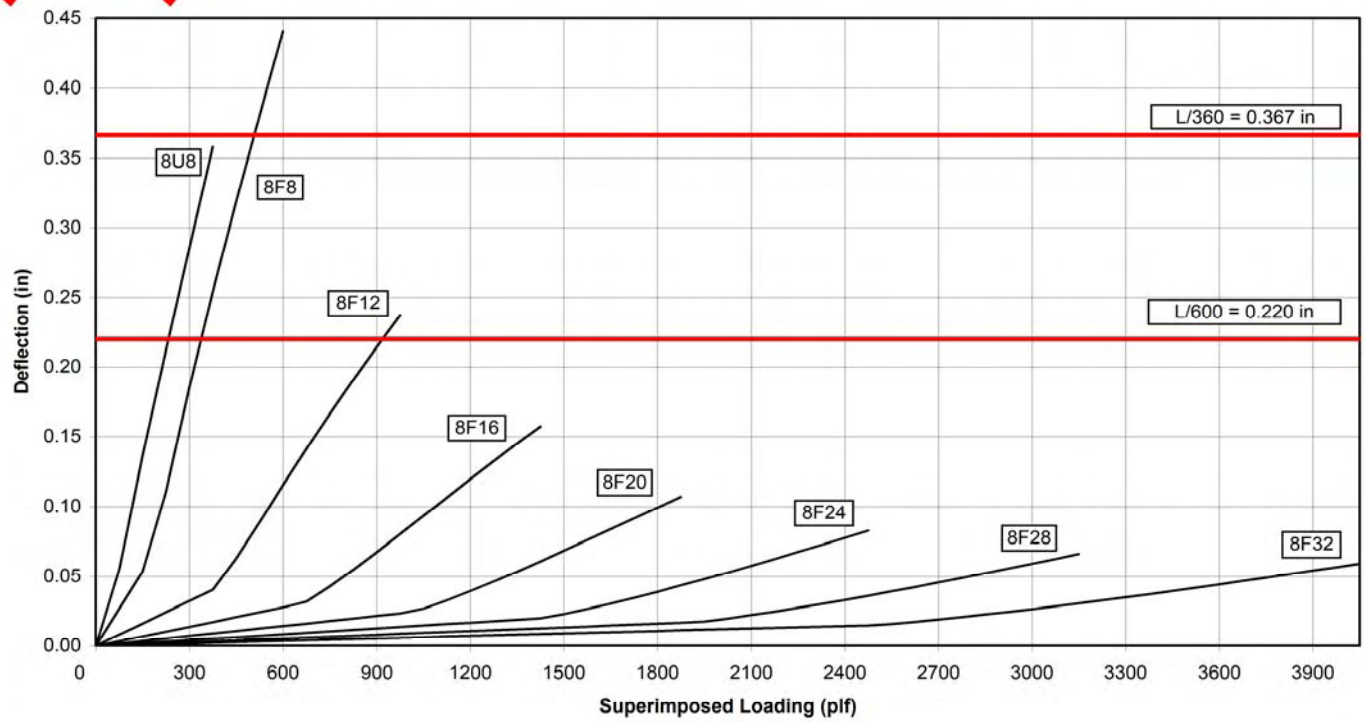

© 2015 Cast-Crete USA, Inc.

8 INCH U-LINTEL LENGTHS 11'-5" TO 12'-0"

DATA SHEET

	U-LINTEL TYPE	8U8	8F8-0B 8F8-1B	8F12-0B 8F12-1B	8F16-0B 8F16-1B	8F20-0B 8F20-1B	8F24-0B 8F24-1B	8F28-0B 8F28-1B	8F32-0B 8F32-1B
GRAVITY	SAFE LOAD (LBS/FT)	337	540 540	873 873	1254 1254	1684 1684	2193 2193	2805 2805	3552 3552
	MOMENT (FT-LB)	8404	10291 13624 (7)	17397 24357 (9)	24599 35306 (10)	39017 46283 (10)	48976 57343 (10)	58975 68452 (11)	69003 79596 (11)
	SHEAR (LBS)	1724	2762 2762	4175 4175	5579 5579	6930 6930	8293 8293	9670 9670	11062 11062

	U-LINTEL TYPE	8U8	8F8-1T 8F8-2T	8F12-1T 8F12-2T	8F16-1T 8F16-2T	8F20-1T 8F20-2T	8F24-1T 8F24-2T	8F28-1T 8F28-2T	8F32-1T 8F32-2T
UPLIFT	SAFE LOAD (LBS/FT)	NR	470 (9) 470	458 (23) 550	724 (31) 940 (10)	938 (32) 1302 (15)	1153 (32) 1560 (13)	1369 (32) 1818 (11)	1585 (32) 2075 (10)
	MOMENT (FT-LB)	NR	8580 (15) 11977 (18)	7792 (23) 9353	12326 (31) 15988 (10)	15962 (32) 23877 (21)	19617 (32) 32876 (30)	23286 (32) 41892 (34)	26966 (32) 48631 (34)
	SHEAR (LBS)	NR	2740 2740	4587 4587	6091 6091	7595 7595	9099 9099	10603 10603	12107 12107

	U-LINTEL TYPE	8U8	8F8	RCMU
LATERAL	SAFE LOAD (LBS/FT)	244	402	137
	MOMENT (FT-LB)	6836	6836	2328
	SHEAR (LBS)	1293	2621	1806

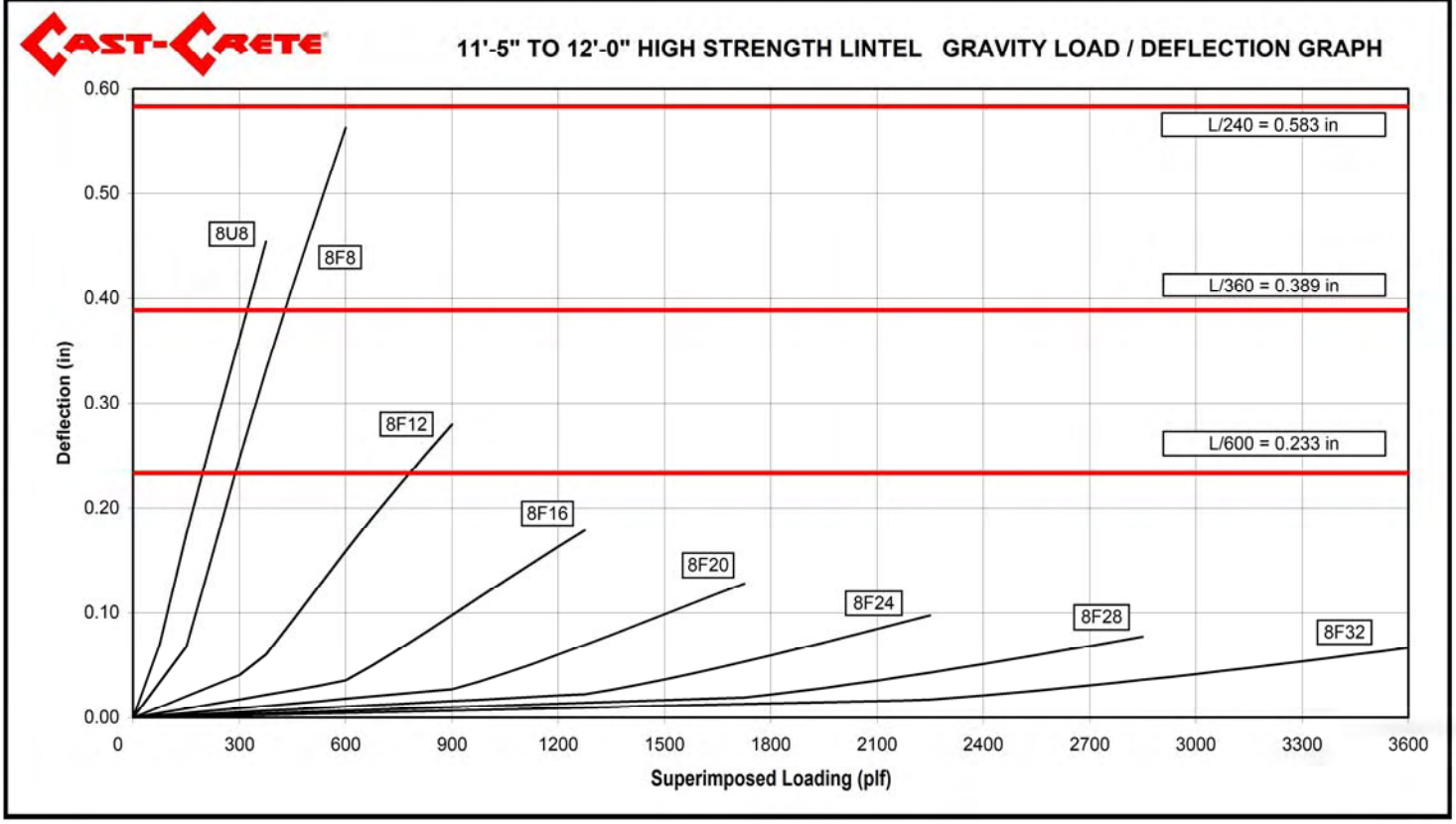

© 2015 Cast-Crete USA, Inc.

8 INCH U-LINTEL
LENGTHS 12'-1" TO 13'-4"

DATA SHEET

GRAVITY	U-LINTEL TYPE	8U8	8F8-0B	8F12-0B	8F16-0B	8F20-0B	8F24-0B	8F28-0B	8F32-0B
			8F8-1B	8F12-1B	8F16-1B	8F20-1B	8F24-1B	8F28-1B	8F32-1B
	SAFE LOAD (LBS/FT)	296	471	755	1075	1428	1838	2316	2883
			471	755	1075	1428	1838	2316	2883
	MOMENT (FT-LB)	8256	10045	17027	24106	38400	48236	58112	68016
			13378 (8)	23987 (9)	34813 (10)	45666 (10)	56603 (11)	67589 (11)	78609 (11)
	SHEAR (LBS)	1711	2722	4115	5499	6830	8173	9530	10902
			2722	4115	5499	6830	8173	9530	10902

UPLIFT	U-LINTEL TYPE	8U8	8F8-1T	8F12-1T	8F16-1T	8F20-1T	8F24-1T	8F28-1T	8F32-1T
			8F8-2T	8F12-2T	8F16-2T	8F20-2T	8F24-2T	8F28-2T	8F32-2T
	SAFE LOAD (LBS/FT)	NR	418 (15)	386 (22)	607 (30)	785 (30)	964 (30)	1143 (31)	1323 (31)
			428	460	780 (9)	1159 (21)	1418 (20)	1653 (19)	1887 (17)
	MOMENT (FT-LB)	NR	8827 (15)	8162 (22)	12820 (30)	16579 (30)	20357 (30)	24150 (31)	27953 (31)
			12224 (18)	9723	16482 (9)	24494 (21)	33616 (29)	42755 (34)	49617 (34)
	SHEAR (LBS)	NR	2780	4647	6171	7695	9219	10743	12267
			2780	4647	6171	7695	9219	10743	12267

LATERAL	U-LINTEL TYPE	8U8	8F8	RCMU
	SAFE LOAD (LBS/FT)	217	324	110
	MOMENT (FT-LB)	6836	6836	2328
	SHEAR (LBS)	1293	2621	1806

12'-1" TO 13'-4" HIGH STRENGTH LINTEL GRAVITY LOAD / DEFLECTION GRAPH

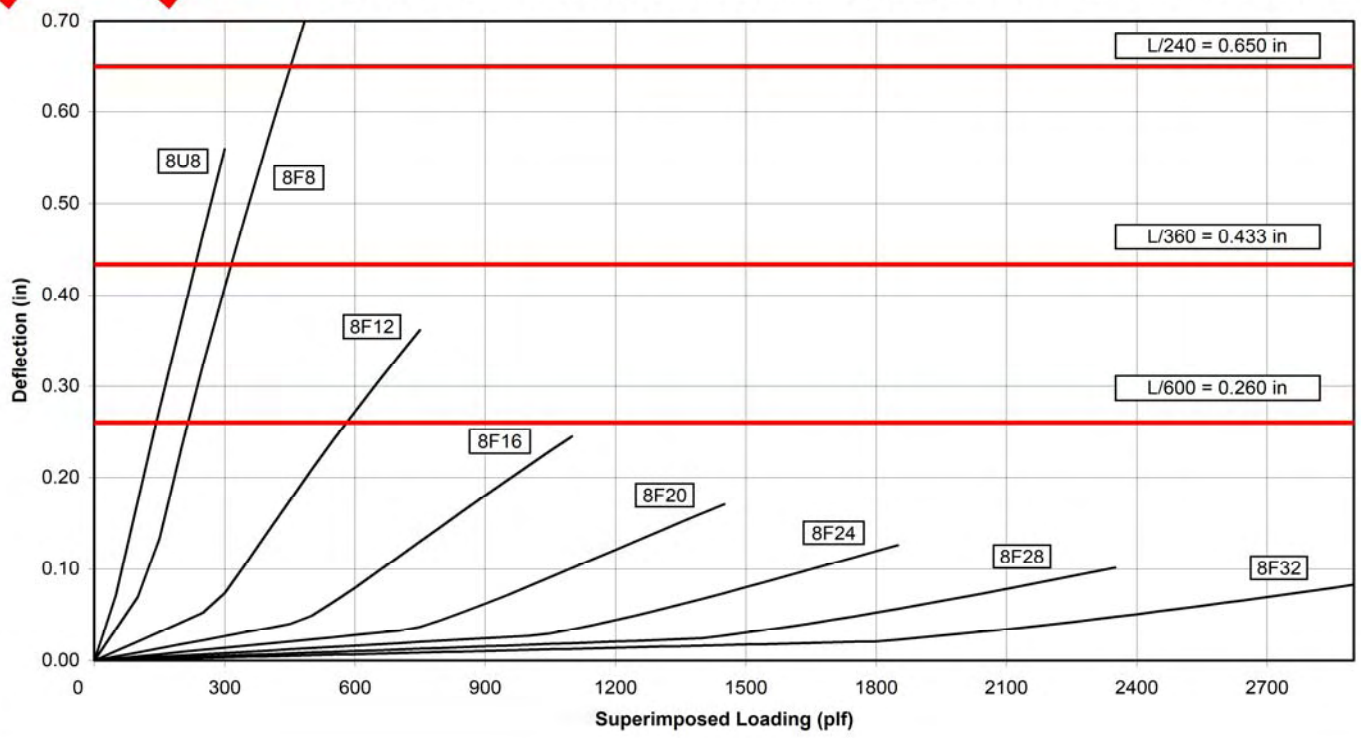

© 2015 Cast-Crete USA, Inc.

8 INCH U-LINTEL
LENGTHS 13'-5" TO 14'-0"

DATA SHEET

	U-LINTEL TYPE	8U8	8F8-0B / 8F8-1B	8F12-0B / 8F12-1B	8F16-0B / 8F16-1B	8F20-0B / 8F20-1B	8F24-0B / 8F24-1B	8F28-0B / 8F28-1B	8F32-0B / 8F32-1B
GRAVITY	SAFE LOAD (LBS/FT)	279	424 442	706 706	1002 1002	1326 1326	1697 1697	2127 2127	2630 2630
	MOMENT (FT-LB)	8176	9911 13244 (8)	16827 23787 (9)	23839 34546 (10)	38067 45333 (10)	47836 56203 (11)	57645 67122 (11)	67483 78076 (11)
	SHEAR (LBS)	1706	2702 2702	4085 4085	5459 5459	6780 6780	8113 8113	9460 9460	10822 10822

	U-LINTEL TYPE	8U8	8F8-1T / 8F8-2T	8F12-1T / 8F12-2T	8F16-1T / 8F16-2T	8F20-1T / 8F20-2T	8F24-1T / 8F24-2T	8F28-1T / 8F28-2T	8F32-1T / 8F32-2T
UPLIFT	SAFE LOAD (LBS/FT)	NR	384 (15) 410	358 (21) 425	560 (29) 717 (9)	724 (30) 1063 (21)	889 (30) 1358 (23)	1054 (30) 1582 (22)	1220 (30) 1807 (21)
	MOMENT (FT-LB)	NR	8960 (15) 12357 (18)	8362 (21) 9923	13086 (29) 16748 (9)	16912 (30) 24827 (21)	20757 (30) 34016 (29)	24616 (30) 43222 (33)	28486 (30) 50151 (33)
	SHEAR (LBS)	NR	2800 2800	4677 4677	6211 6211	7745 7745	9279 9279	10813 10813	12347 12347

	U-LINTEL TYPE	8U8	8F8	RCMU
LATERAL	SAFE LOAD (LBS/FT)	205	293	100
	MOMENT (FT-LB)	6836	6836	2328
	SHEAR (LBS)	1293	2621	1806

13'-5" TO 14'-0" HIGH STRENGTH LINTEL GRAVITY LOAD / DEFLECTION GRAPH

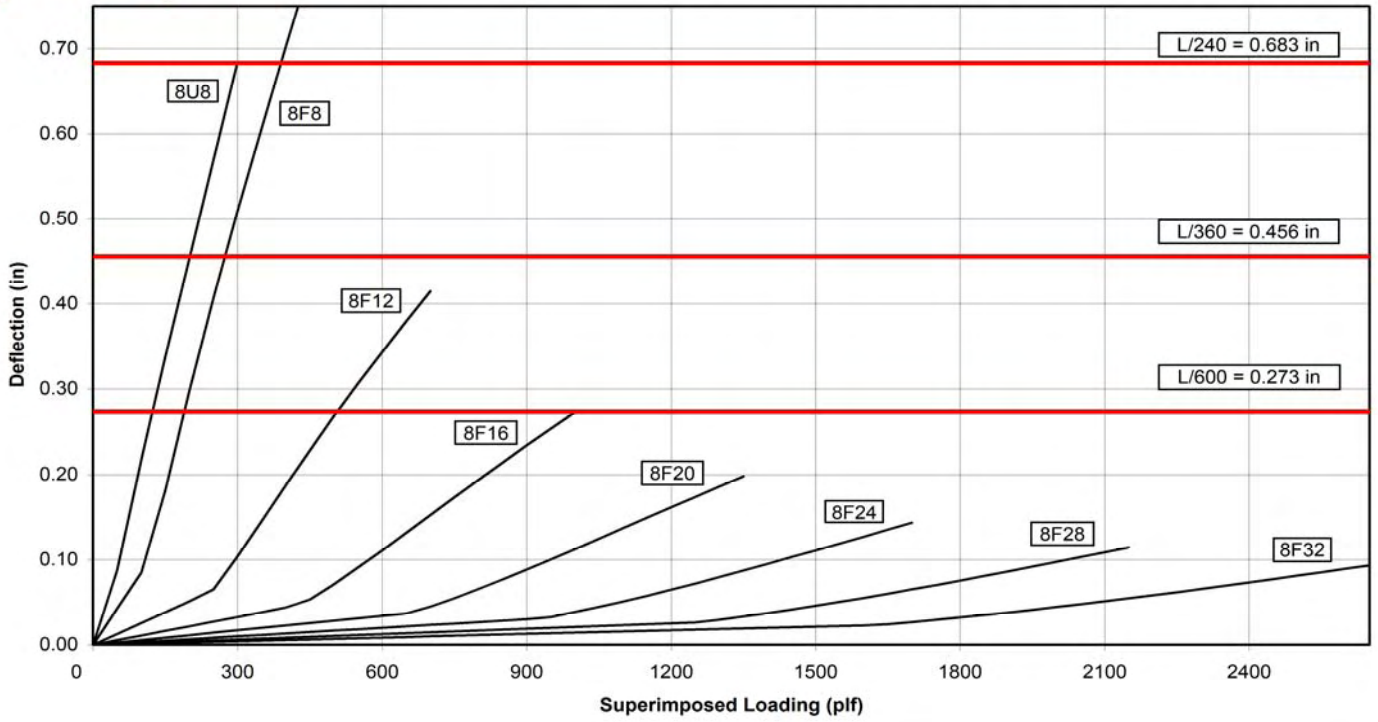

© 2015 Cast-Crete USA, Inc.

8 INCH U-LINTEL LENGTHS 14'-1" TO 14'-8"

DATA SHEET

	U-LINTEL TYPE	8U8	8F8-0B / 8F8-1B	8F12-0B / 8F12-1B	8F16-0B / 8F16-1B	8F20-0B / 8F20-1B	8F24-0B / 8F24-1B	8F28-0B / 8F28-1B	8F32-0B / 8F32-1B
GRAVITY	SAFE LOAD (LBS/FT)	NR	NR	NR	NR	NR	NR	NR	NR
			458	783	1370	1902	2245	2517	2712
	MOMENT (FT-LB)	NR	NR	NR	NR	NR	NR	NR	NR
			13670 (7)	22196 (10)	41777 (9)	57838 (8)	74110 (8)	90452 (8)	106443 (8)
	SHEAR (LBS)	NR	NR	NR	NR	NR	NR	NR	NR
			3010	4886	8092	10600	11763	12349	12492

	U-LINTEL TYPE	8U8	8F8-1T / 8F8-2T	8F12-1T / 8F12-2T	8F16-1T / 8F16-2T	8F20-1T / 8F20-2T	8F24-1T / 8F24-2T	8F28-1T / 8F28-2T	8F32-1T / 8F32-2T
UPLIFT	SAFE LOAD (LBS/FT)	NR	239	334 (21)	520 (29)	672 (29)	825 (29)	978 (29)	1131 (30)
			246	395	663 (9)	980 (20)	1303 (26)	1518 (25)	1734 (24)
	MOMENT (FT-LB)	NR	7041 (12)	8572 (21)	13366 (29)	17262 (29)	21177 (29)	25106 (29)	29046 (30)
			9166 (15)	10133	17028 (9)	25177 (20)	34436 (28)	43712 (33)	50711 (33)
	SHEAR (LBS)	NR	3008	4707	6251	7795	9339	10883	12427
			3008	4707	6251	7795	9339	10883	12427

	U-LINTEL TYPE	8U8	8F8	RCMU
LATERAL	SAFE LOAD (LBS/FT)	NR	284	91
	MOMENT (FT-LB)	NR	8250	2328
	SHEAR (LBS)	NR	3187	1806

14'-1" TO 14'-8" HIGH STRENGTH LINTEL GRAVITY LOAD / DEFLECTION GRAPH

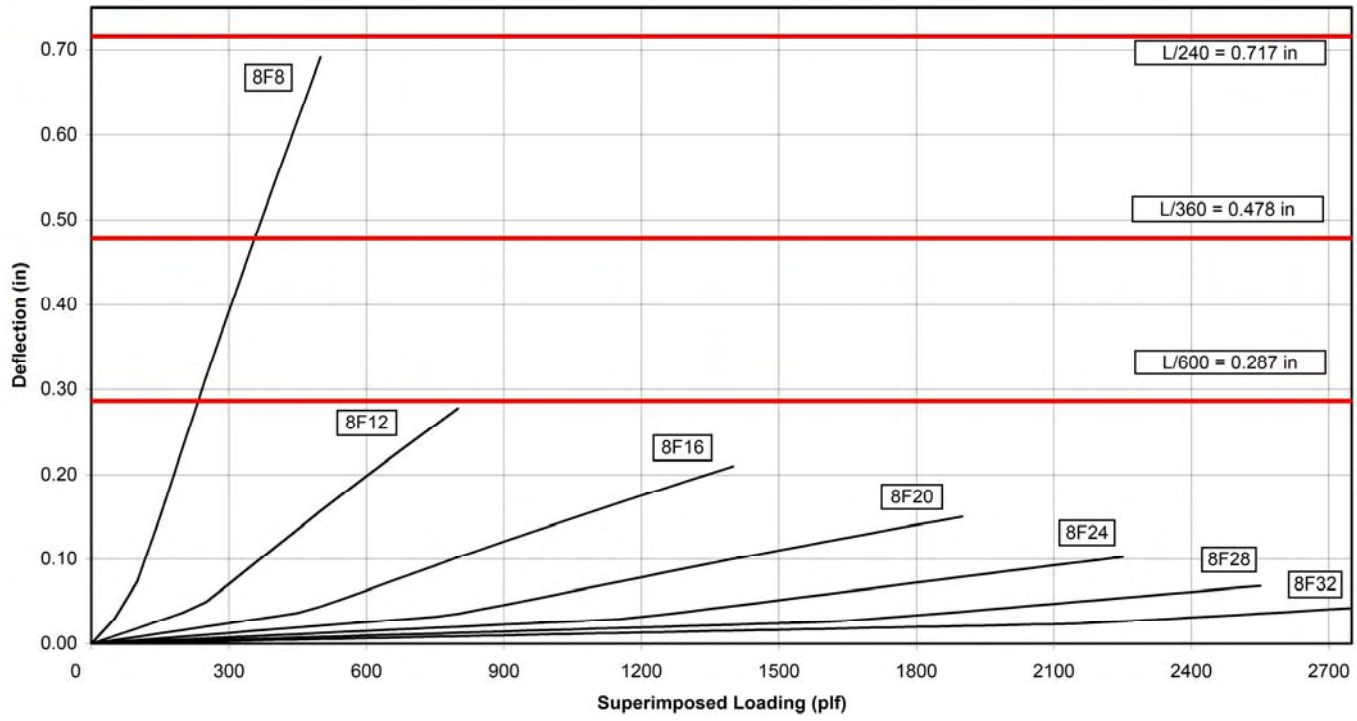

© 2015 Cast-Crete USA, Inc.

8 INCH U-LINTEL LENGTHS 14'-9" TO 15'-4"

DATA SHEET

	U-LINTEL TYPE	8U8	8F8-0B / 8F8-1B	8F12-0B / 8F12-1B	8F16-0B / 8F16-1B	8F20-0B / 8F20-1B	8F24-0B / 8F24-1B	8F28-0B / 8F28-1B	8F32-0B / 8F32-1B
GRAVITY	SAFE LOAD (LBS/FT)	NR	NR	NR	NR	NR	NR	NR	NR
			412	710	1250	1733	2058	2320	2513
	MOMENT (FT-LB)	NR	NR	NR	NR	NR	NR	NR	NR
			13524 (7)	21976 (10)	41484 (9)	57471 (8)	73670 (8)	89939 (8)	105856 (8)
	SHEAR (LBS)	NR	NR	NR	NR	NR	NR	NR	NR
			2990	4856	8052	10550	11703	12279	12412

	U-LINTEL TYPE	8U8	8F8-1T / 8F8-2T	8F12-1T / 8F12-2T	8F16-1T / 8F16-2T	8F20-1T / 8F20-2T	8F24-1T / 8F24-2T	8F28-1T / 8F28-2T	8F32-1T / 8F32-2T
UPLIFT	SAFE LOAD (LBS/FT)	NR	224	313 (20)	486 (28)	627 (29)	769 (29)	911 (29)	1054 (29)
			230	368	616 (9)	908 (20)	1240 (28)	1460 (27)	1668 (26)
	MOMENT (FT-LB)	NR	7188 (12)	8792 (20)	13660 (28)	17629 (29)	21617 (29)	25620 (29)	29633 (29)
			9313 (15)	10353	17322 (9)	25544 (20)	34876 (28)	44225 (32)	51297 (33)
	SHEAR (LBS)	NR	3028	4737	6291	7845	9399	10953	12507
			3028	4737	6291	7845	9399	10953	12507

	U-LINTEL TYPE	8U8	8F8	RCMU
LATERAL	SAFE LOAD (LBS/FT)	NR	259	83
	MOMENT (FT-LB)	NR	8250	2328
	SHEAR (LBS)	NR	3187	1806

14'-9" TO 15'-4" HIGH STRENGTH LINTEL GRAVITY LOAD / DEFLECTION GRAPH

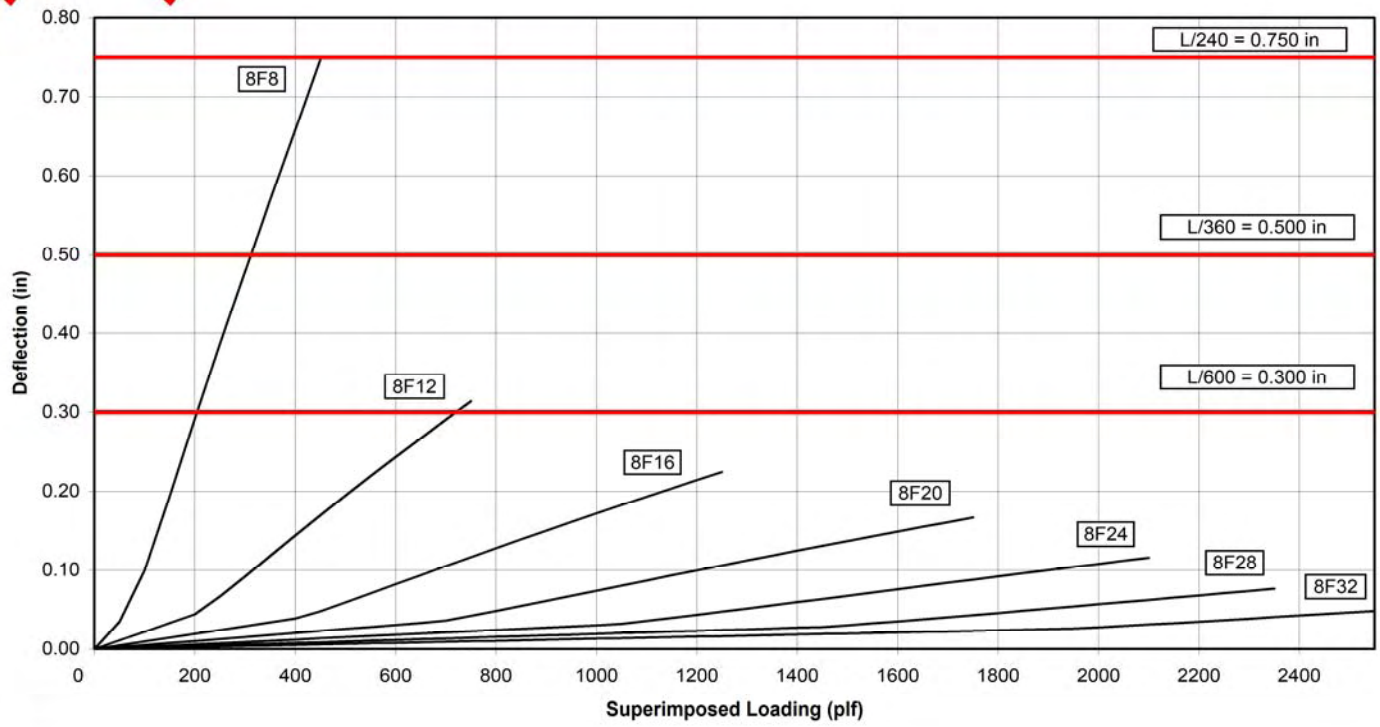

© 2015 Cast-Crete USA, Inc.

8 INCH U-LINTEL LENGTHS 15'-5" TO 17'-4"

DATA SHEET

	U-LINTEL TYPE	8U8	8F8-0B / 8F8-1B	8F12-0B / 8F12-1B	8F16-0B / 8F16-1B	8F20-0B / 8F20-1B	8F24-0B / 8F24-1B	8F28-0B / 8F28-1B	8F32-0B / 8F32-1B
GRAVITY	SAFE LOAD (LBS/FT)	NR	NR	NR	NR	NR	NR	NR	NR
			300	548	950	1326	1609	1849	2047
	MOMENT (FT-LB)	NR	NR	NR	NR	NR	NR	NR	NR
			13044 (7)	21256 (11)	40524 (9)	56271 (8)	72230 (9)	88259 (9)	103936 (8)
	SHEAR (LBS)	NR	NR	NR	NR	NR	NR	NR	NR
			2930	4766	7932	10400	11523	12069	12172

	U-LINTEL TYPE	8U8	8F8-1T / 8F8-2T	8F12-1T / 8F12-2T	8F16-1T / 8F16-2T	8F20-1T / 8F20-2T	8F24-1T / 8F24-2T	8F28-1T / 8F28-2T	8F32-1T / 8F32-2T
UPLIFT	SAFE LOAD (LBS/FT)	NR	187	263 (19)	405 (26)	521 (27)	638 (27)	756 (27)	873 (27)
			192	306	506 (8)	740 (19)	1005 (27)	1271 (31)	1473 (31)
	MOMENT (FT-LB)	NR	7668 (11)	9512 (19)	14620 (26)	18829 (27)	23057 (27)	27300 (27)	31553 (27)
			9793 (14)	11073	18282 (8)	26744 (19)	36316 (27)	45905 (31)	53217 (31)
	SHEAR (LBS)	NR	3088	4827	6411	7995	9579	11163	12747
			3088	4827	6411	7995	9579	11163	12747

	U-LINTEL TYPE	8U8	8F8	RCMU
LATERAL	SAFE LOAD (LBS/FT)	NR	194	64
	MOMENT (FT-LB)	NR	8250	2328
	SHEAR (LBS)	NR	3187	1806

15'-5" TO 17'-4" HIGH STRENGTH LINTEL GRAVITY LOAD / DEFLECTION GRAPH

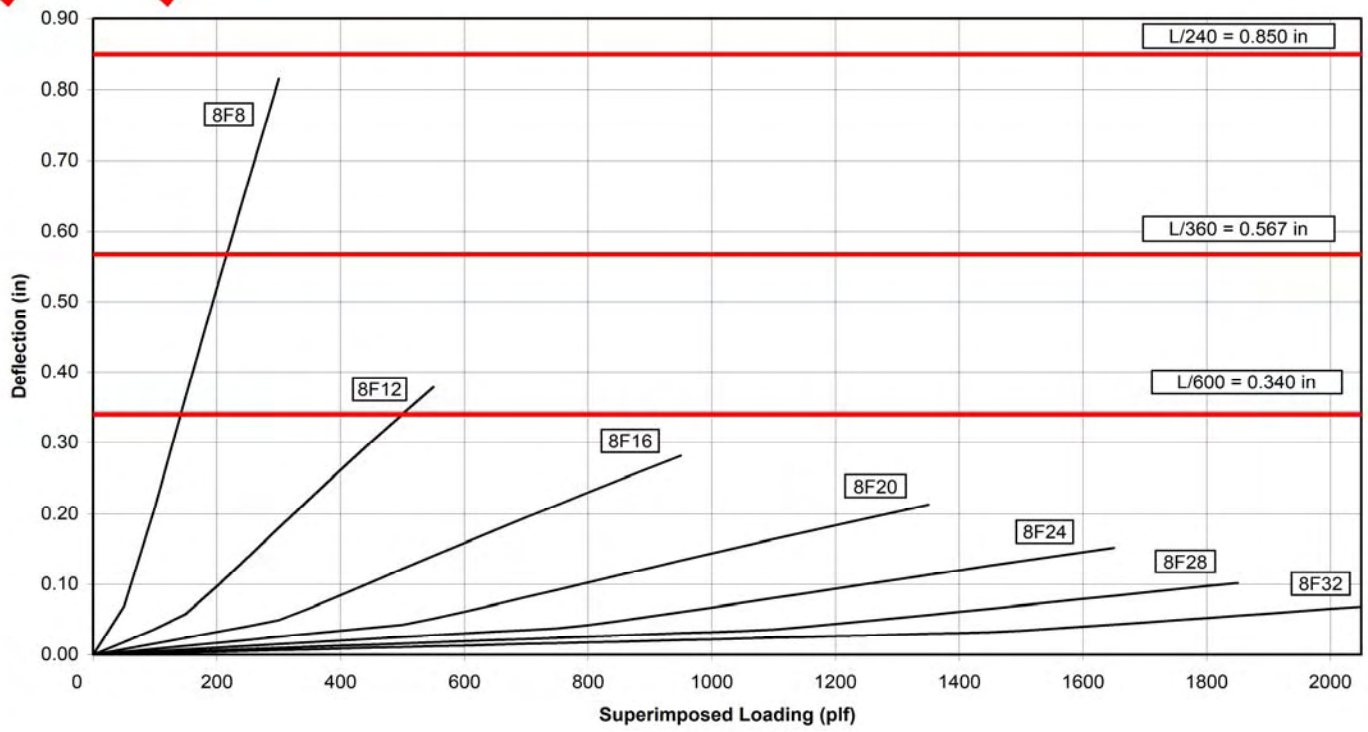

© 2015 Cast-Crete USA, Inc.

8 INCH U-LINTEL LENGTHS 17'-5" TO 19'-4"

DATA SHEET

	U-LINTEL TYPE	8U8	8F8-0B 8F8-1B	8F12-0B 8F12-1B	8F16-0B 8F16-1B	8F20-0B 8F20-1B	8F24-0B 8F24-1B	8F28-0B 8F28-1B	8F32-0B 8F32-1B
GRAVITY	SAFE LOAD (LBS/FT)	NR	NR 235	NR 420	NR 750	NR 1037	NR 1282	NR 1515	NR 1716
	MOMENT (FT-LB)	NR	NR 12504 (7)	NR 20446 (11)	NR 39444 (9)	NR 54921 (9)	NR 70610 (9)	NR 86369 (9)	NR 101776 (9)
	SHEAR (LBS)	NR	NR 2870	NR 4676	NR 7812	NR 10250	NR 11343	NR 11859	NR 11932

	U-LINTEL TYPE	8U8	8F8-1T 8F8-2T	8F12-1T 8F12-2T	8F16-1T 8F16-2T	8F20-1T 8F20-2T	8F24-1T 8F24-2T	8F28-1T 8F28-2T	8F32-1T 8F32-2T
UPLIFT	SAFE LOAD (LBS/FT)	NR	162 166	229 (17) 263	348 (25) 429 (8)	447 (25) 623 (18)	547 (25) 841 (26)	647 (25) 1059 (30)	747 (25) 1227 (30)
	MOMENT (FT-LB)	NR	8208 (11) 10333 (13)	10322 (17) 11883	15700 (25) 19362 (8)	20179 (25) 28094 (18)	24677 (25) 37936 (26)	29190 (25) 47795 (30)	33713 (25) 55377 (30)
	SHEAR (LBS)	NR	3148 3148	4917 4917	6531 6531	8145 8145	9759 9759	11373 11373	12987 12987

	U-LINTEL TYPE	8U8	8F8	RCMU
LATERAL	SAFE LOAD (LBS/FT)	NR	148	52
	MOMENT (FT-LB)	NR	8250	2328
	SHEAR (LBS)	NR	3187	1806

17'-5" TO 19'-4" HIGH STRENGTH LINTEL GRAVITY LOAD / DEFLECTION GRAPH

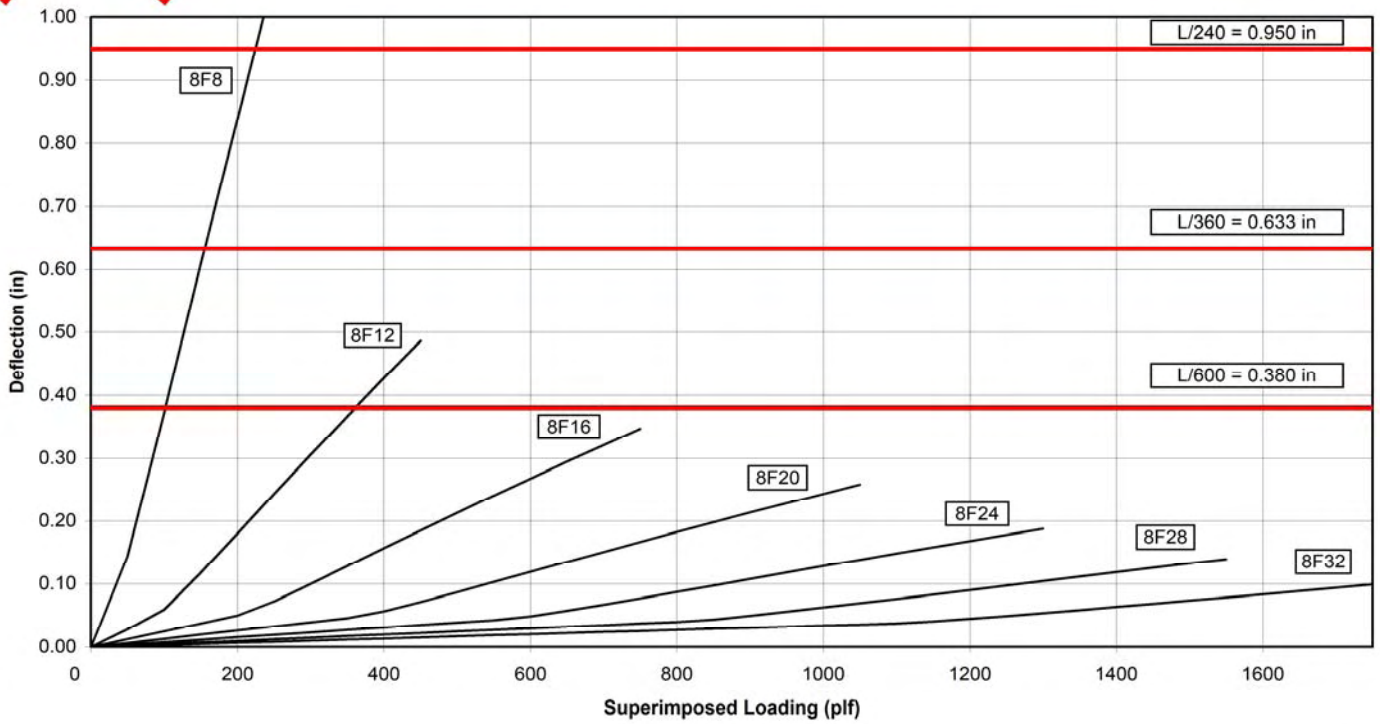

© 2015 Cast-Crete USA, Inc.

8 INCH U-LINTEL LENGTHS 19'-5" TO 21'-4"

DATA SHEET

	U-LINTEL TYPE	8U8	8F8-0B 8F8-1B	8F12-0B 8F12-1B	8F16-0B 8F16-1B	8F20-0B 8F20-1B	8F24-0B 8F24-1B	8F28-0B 8F28-1B	8F32-0B 8F32-1B
GRAVITY	SAFE LOAD (LBS/FT)	NR	NR 180	NR 340	NR 598	NR 845	NR 1114	NR 1359	NR 1468
	MOMENT (FT-LB)	NR	NR 13101 (10)	NR 20532 (12)	NR 41977 (9)	NR 68139 (14)	NR 88670 (14)	NR 109199 (14)	NR 129587 (14)
	SHEAR (LBS)	NR	NR 2810	NR 4586	NR 7692	NR 10100	NR 11163	NR 11649	NR 11692

	U-LINTEL TYPE	8U8	8F8-1T 8F8-2T	8F12-1T 8F12-2T	8F16-1T 8F16-2T	8F20-1T 8F20-2T	8F24-1T 8F24-2T	8F28-1T 8F28-2T	8F32-1T 8F32-2T
UPLIFT	SAFE LOAD (LBS/FT)	NR	142 142	204 (16) 232	307 (23) 373 (7)	393 (23) 537 (17)	480 (23) 721 (25)	568 (24) 905 (29)	655 (24) 1048 (29)
	MOMENT (FT-LB)	NR	8808 (10) 13746 (16)	11222 (16) 12783	16900 (23) 20562 (7)	21679 (23) 29594 (17)	26477 (23) 39736 (25)	31290 (24) 49895 (29)	36113 (24) 57777 (29)
	SHEAR (LBS)	NR	3208 3208	5007 5007	6651 6651	8295 8295	9939 9939	11583 11583	13227 13227

	U-LINTEL TYPE	8U8	8F8	RCMU
LATERAL	SAFE LOAD (LBS/FT)	NR	125	42
	MOMENT (FT-LB)	NR	9938	2328
	SHEAR (LBS)	NR	3187	1806

19'-5" TO 21'-4" HIGH STRENGTH LINTEL GRAVITY LOAD / DEFLECTION GRAPH

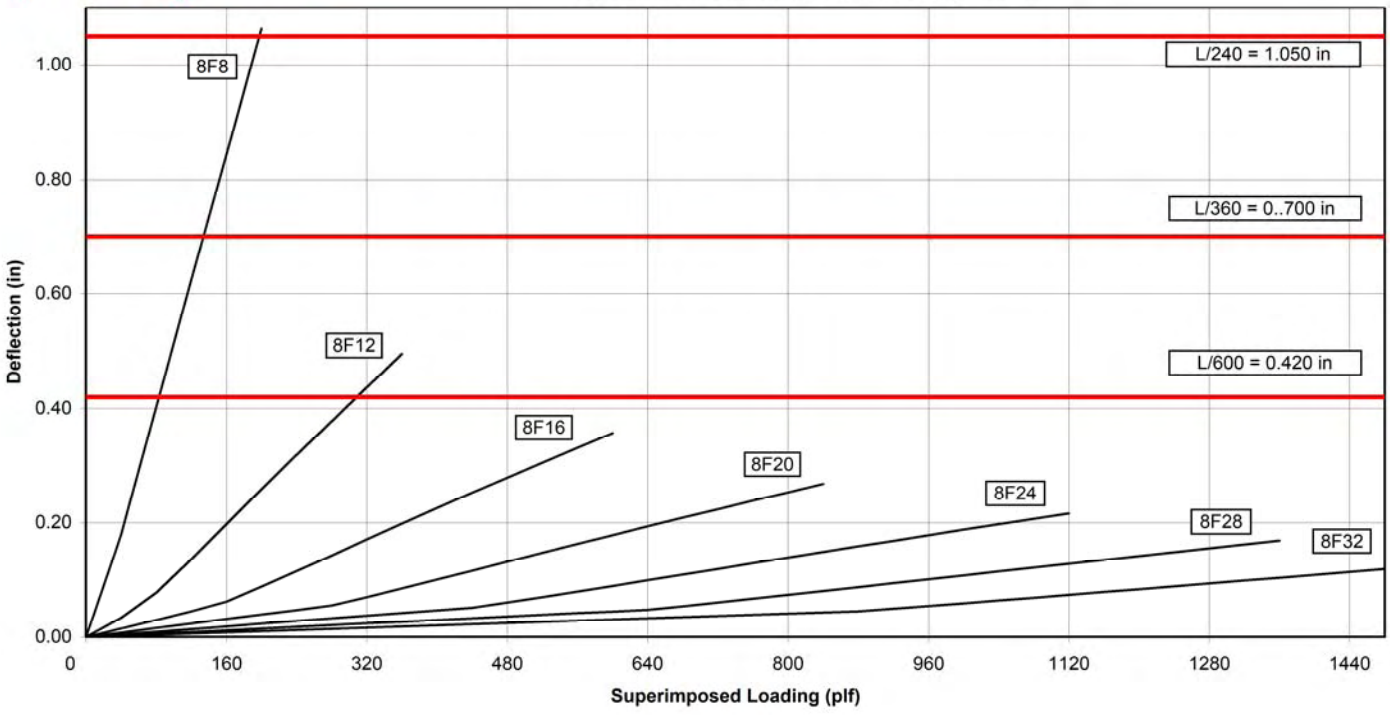

© 2015 Cast-Crete USA, Inc.

8 INCH U-LINTEL LENGTHS 21'-5" TO 22'-0"

DATA SHEET

GRAVITY	U-LINTEL TYPE	8U8	8F8-0B	8F12-0B	8F16-0B	8F20-0B	8F24-0B	8F28-0B	8F32-0B
			8F8-1B	8F12-1B	8F16-1B	8F20-1B	8F24-1B	8F28-1B	8F32-1B
	SAFE LOAD (LBS/FT)	NR	NR	NR	NR	NR	NR	NR	NR
			165	315	550	784	1047	1285	1399
	MOMENT (FT-LB)	NR	NR	NR	NR	NR	NR	NR	NR
			12887 (10)	20212 (13)	41550 (9)	67606 (14)	88030 (14)	108452 (14)	128734 (14)
	SHEAR (LBS)	NR	NR	NR	NR	NR	NR	NR	NR
			2790	4556	7652	10050	11103	11579	11612

UPLIFT	U-LINTEL TYPE	8U8	8F8-1T	8F12-1T	8F16-1T	8F20-1T	8F24-1T	8F28-1T	8F32-1T
			8F8-2T	8F12-2T	8F16-2T	8F20-2T	8F24-2T	8F28-2T	8F32-2T
	SAFE LOAD (LBS/FT)	NR	137	197 (15)	295 (22)	379 (23)	462 (23)	546 (23)	630 (23)
			137	223	358 (7)	513 (17)	688 (24)	863 (28)	999 (28)
	MOMENT (FT-LB)	NR	9021 (10)	11542 (15)	17326 (22)	22212 (23)	27117 (23)	32036 (23)	36966 (23)
			13959 (16)	13103	20988 (7)	30127 (17)	40376 (24)	50642 (28)	58631 (28)
	SHEAR (LBS)	NR	3228	5037	6691	8345	9999	11653	13307
			3228	5037	6691	8345	9999	11653	13307

LATERAL	U-LINTEL TYPE	8U8	8F8	RCMU
	SAFE LOAD (LBS/FT)	NR	116	40
	MOMENT (FT-LB)	NR	9938	2328
	SHEAR (LBS)	NR	3187	1806

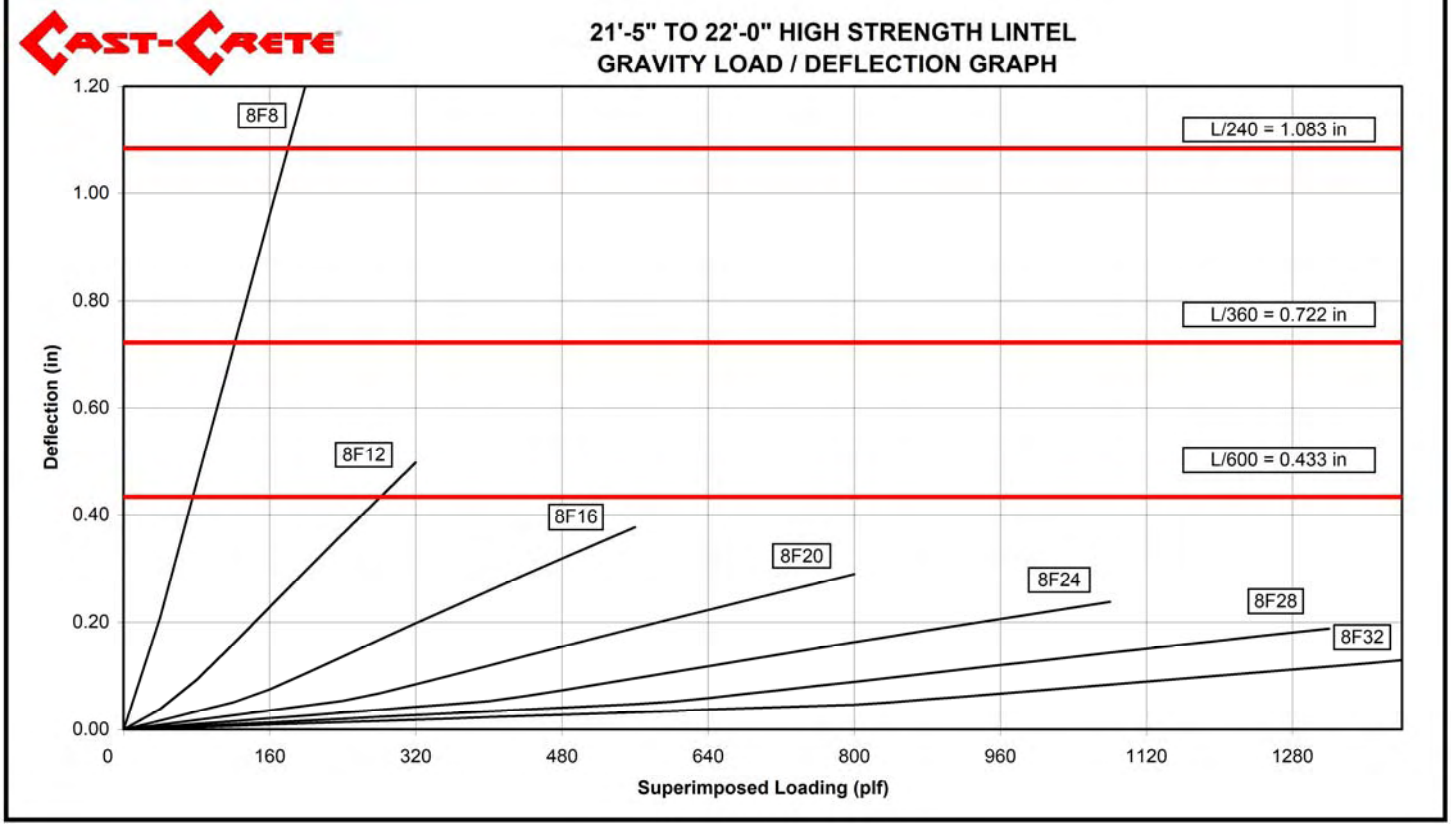

© 2015 Cast-Crete USA, Inc.

8 INCH U-LINTEL LENGTHS 22'-1" TO 24'-0"

DATA SHEET

GRAVITY	U-LINTEL TYPE	8U8	8F8-0B	8F12-0B	8F16-0B	8F20-0B	8F24-0B	8F28-0B	8F32-0B
			8F8-1B	8F12-1B	8F16-1B	8F20-1B	8F24-1B	8F28-1B	8F32-1B
	SAFE LOAD (LBS/FT)	NR	NR	NR	NR	NR	NR	NR	NR
			129	250	450	654	884	1092	1222
	MOMENT (FT-LB)	NR	NR	NR	NR	NR	NR	NR	NR
			12207 (10)	19192 (13)	40190 (10)	65906 (14)	85990 (15)	106072 (15)	126014 (15)
	SHEAR (LBS)	NR	NR	NR	NR	NR	NR	NR	NR
			2730	4466	7532	9900	10923	11369	11372

UPLIFT	U-LINTEL TYPE	8U8	8F8-1B	8F12-1B	8F16-1B	8F20-1B	8F24-1B	8F28-1B	8F32-1B
			8F8-2T	8F12-2T	8F16-2T	8F20-2T	8F24-2T	8F28-2T	8F32-2T
	SAFE LOAD (LBS/FT)	NR	124	179 (14)	267 (21)	342 (21)	416 (21)	492 (21)	567 (22)
			124	202	319 (7)	455 (16)	606 (23)	757 (27)	876 (27)
	MOMENT (FT-LB)	NR	9701 (9)	12562 (14)	18686 (21)	23912 (21)	29157 (21)	34416 (21)	39686 (22)
			14639 (15)	14123	22348 (7)	31827 (16)	42416 (23)	53022 (27)	61351 (27)
	SHEAR (LBS)	NR	3288	5127	6811	8495	10179	11863	13547
			3288	5127	6811	8495	10179	11863	13547

LATERAL	U-LINTEL TYPE	8U8	8F8	RCMU
	SAFE LOAD (LBS/FT)	NR	91	33
	MOMENT (FT-LB)	NR	9938	2328
	SHEAR (LBS)	NR	3187	1806

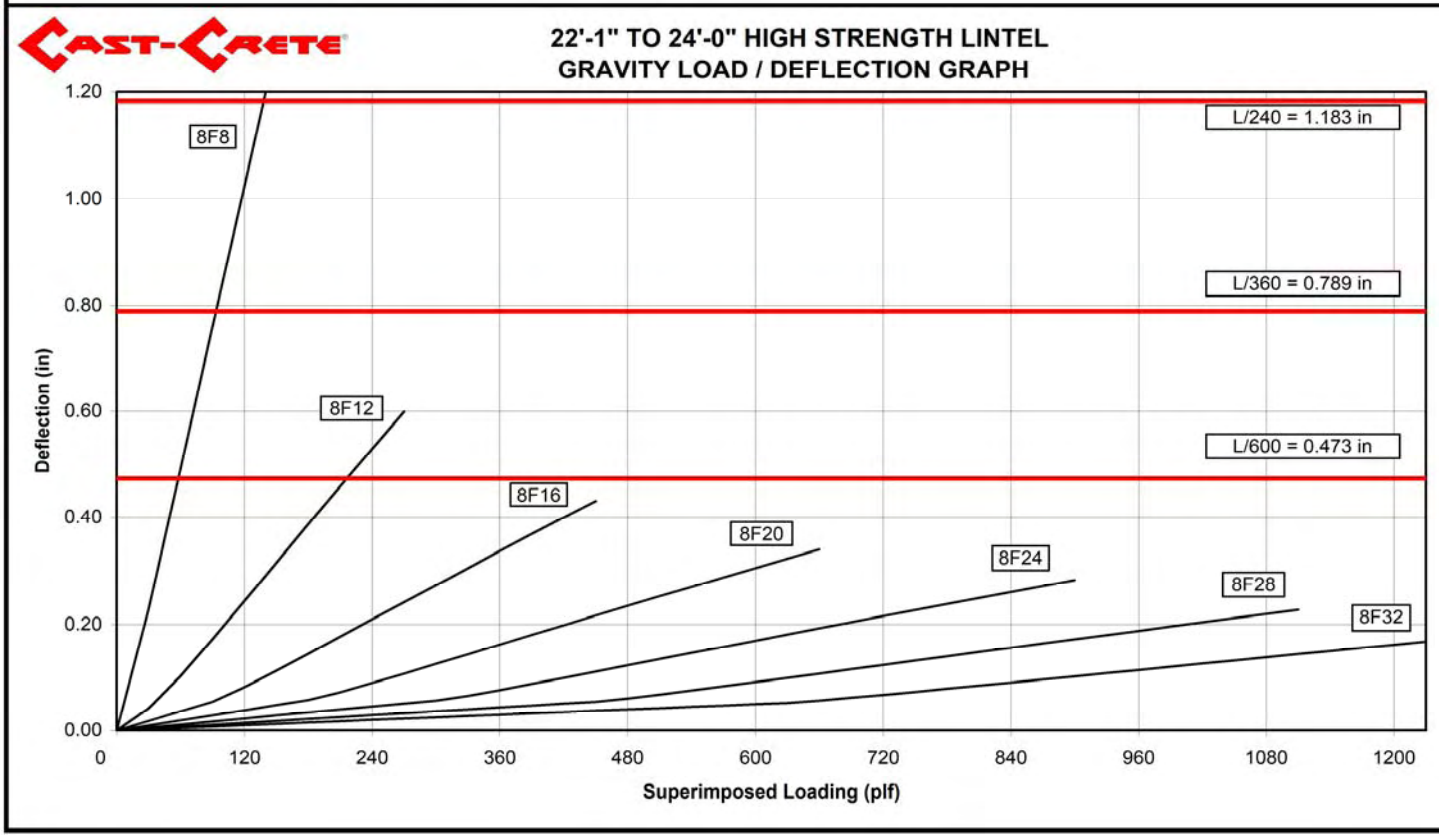

© 2015 Cast-Crete USA, Inc.

8 INCH RECESS U-LINTEL LENGTHS 3'-8" TO 4'-4"

DATA SHEET

	U-LINTEL TYPE	8RU6	8RF6-0B / 8RF6-1B	8RF10-0B / 8RF10-1B	8RF14-0B / 8RF14-1B	8RF18-0B / 8RF18-1B	8RF22-0B / 8RF22-1B	8RF26-0B / 8RF26-1B	8RF30-0B / 8RF30-1B
GRAVITY	SAFE LOAD (LBS/FT)	1635	1749	3355	3280	4349	5421	6493	7567
			1891	3699	5206	6639	8060	9479	10893
	MOMENT (FT-LB)	2748	2939	5639	5512	7310	9109	10912	12717
			4929 (12)	11374 (16)	17922 (17)	24487 (18)	31080 (46)	25021 (18)	29422 (19)
	SHEAR (LBS)	1850	2107	3641	5159	6624	8060	9479	10893
			2107	3641	5159	6624	8060	9479	10893

	U-LINTEL TYPE	8RU6	8RF6-1T / 8RF6-2T	8RF10-1T / 8RF10-2T	8RF14-1T / 8RF14-2T	8RF18-1T / 8RF18-2T	8RF22-1T / 8RF22-2T	8RF26-1T / 8RF26-2T	8RF30-1T / 8RF30-2T
UPLIFT	SAFE LOAD (LBS/FT)	NR	905	1668	2362	3056	3751	4445	5140
			905	1668	2362	3056	3751	4445	5140
	MOMENT (FT-LB)	NR	3025 (30)	4434 (17)	8707 (35)	12113 (37)	15309 (37)	18521 (37)	21745 (37)
			4120 (7)	5440	10924 (2)	17757 (18)	25765 (28)	34828 (36)	41878 (37)
	SHEAR (LBS)	NR	1659	3335	4724	6113	7502	8891	10280
			1659	3335	4724	6113	7502	8891	10280

	U-LINTEL TYPE	8RU6	8RF6	RCMU
LATERAL	SAFE LOAD (LBS/FT)	758	757	1164
	MOMENT (FT-LB)	1272	1272	2328
	SHEAR (LBS)	1469	1946	1806

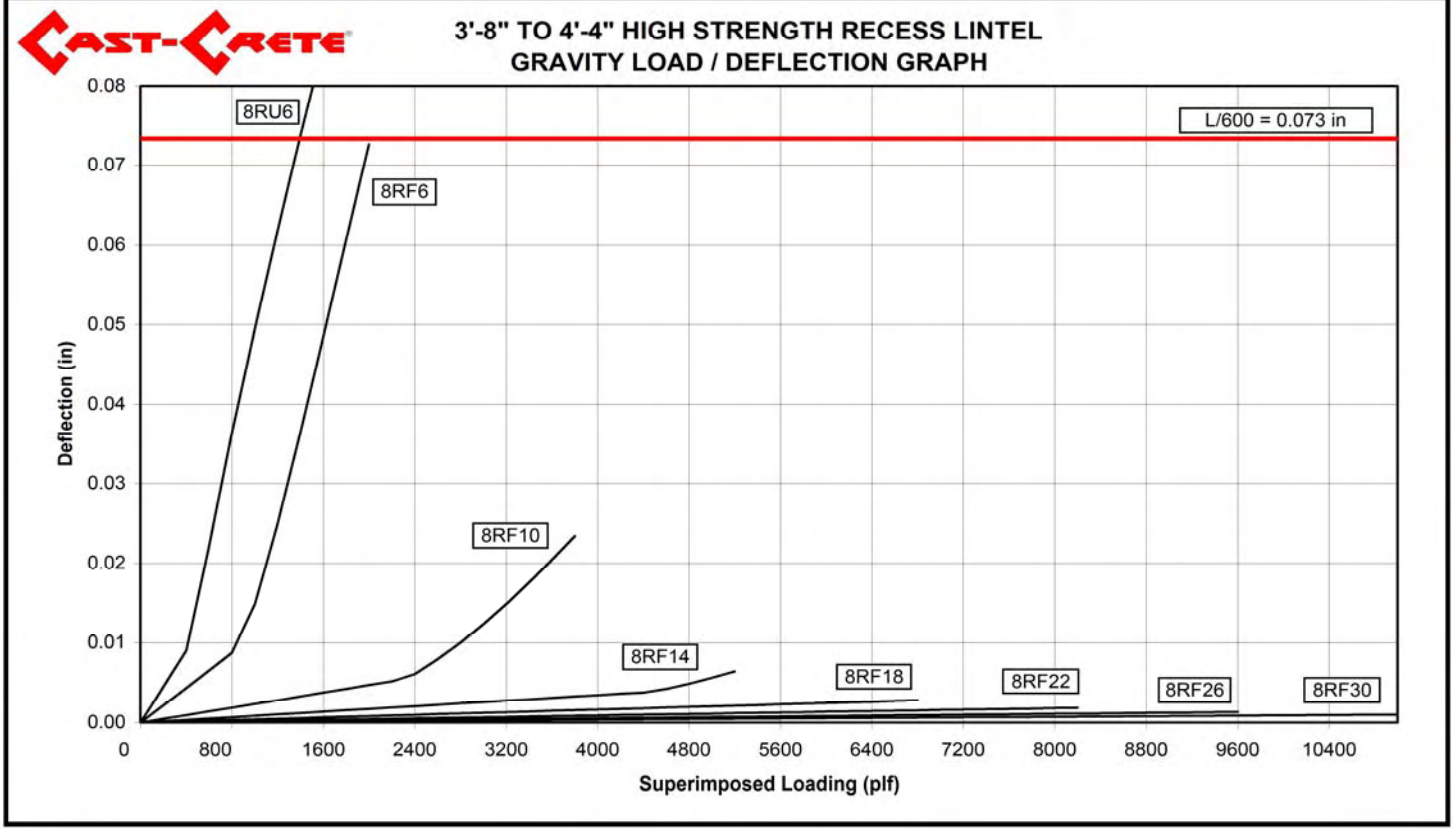

© 2015 Cast-Crete USA, Inc.

8 INCH RECESS U-LINTEL LENGTHS 4'-5" TO 4'-6"

DATA SHEET

	U-LINTEL TYPE	8RU6	8RF6-0B 8RF6-1B	8RF10-0B 8RF10-1B	8RF14-0B 8RF14-1B	8RF18-0B 8RF18-1B	8RF22-0B 8RF22-1B	8RF26-0B 8RF26-1B	8RF30-0B 8RF30-1B
GRAVITY	SAFE LOAD (LBS/FT)	1494	1596 1756	3063 3699	2992 5206	3968 6639	4946 8060	5924 9479	6904 10893
	MOMENT (FT-LB)	2744	2932 4922 (12)	5627 11362 (16)	5496 17906 (17)	7289 24466 (18)	9084 31055 (46)	10882 24991 (18)	12682 29387 (19)
	SHEAR (LBS)	1847	2103 2103	3635 3635	5151 5151	6612 6612	8060 8060	9479 9479	10893 10893

	U-LINTEL TYPE	8RU6	8RF6-1T 8RF6-2T	8RF10-1T 8RF10-2T	8RF14-1T 8RF14-2T	8RF18-1T 8RF18-2T	8RF22-1T 8RF22-2T	8RF26-1T 8RF26-2T	8RF30-1T 8RF30-2T
UPLIFT	SAFE LOAD (LBS/FT)	NR	867 867	1604 1604	2272 2272	2939 2939	3607 3607	4275 4275	4943 4943
	MOMENT (FT-LB)	NR	3032 (30) 4127 (7)	4447 (17) 5452	8725 (35) 10942 (2)	12135 (37) 17780 (18)	15337 (37) 25793 (28)	18554 (37) 34861 (36)	21783 (37) 41916 (37)
	SHEAR (LBS)	NR	1662 1662	3341 3341	4733 4733	6124 6124	7516 7516	8907 8907	10299 10299

	U-LINTEL TYPE	8RU6	8RF6	RCMU
LATERAL	SAFE LOAD (LBS/FT)	694	693	1073
	MOMENT (FT-LB)	1272	1272	2328
	SHEAR (LBS)	1469	1946	1806

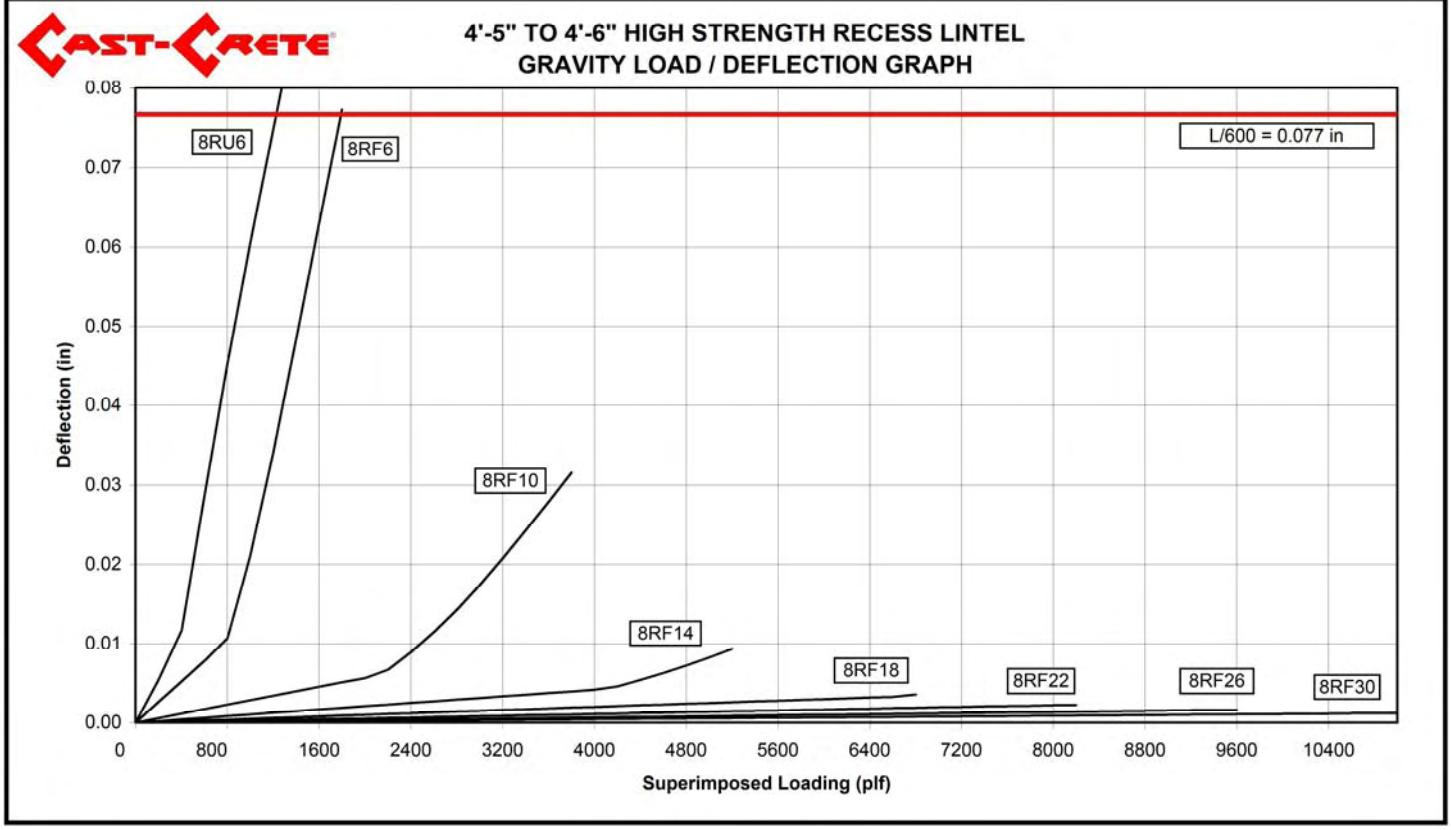

8 INCH RECESS U-LINTEL LENGTHS 4'-7" TO 5'-8"

DATA SHEET

	U-LINTEL TYPE	8RU6	8RF6-0B 8RF6-1B	8RF10-0B 8RF10-1B	8RF14-0B 8RF14-1B	8RF18-0B 8RF18-1B	8RF22-0B 8RF22-1B	8RF26-0B 8RF26-1B	8RF30-0B 8RF30-1B
GRAVITY	SAFE LOAD (LBS/FT)	866	920	1770	1716	2277	2839	3402	3966
			1167	2481	4567	6389	8060 (34)	7917 (19)	9311 (19)
	MOMENT (FT-LB)	2708	2876	5532	5362	7116	8873	10632	12393
			4866 (12)	11267 (16)	17772 (17)	24293 (18)	30844 (46)	24741 (19)	29098 (19)
	SHEAR (LBS)	1831	2078	3592	5090	6534	7987	9457	10893
			2078	3592	5090	6534	7987	9457	10893

	U-LINTEL TYPE	8RU6	8RF6-1T 8RF6-2T	8RF10-1T 8RF10-2T	8RF14-1T 8RF14-2T	8RF18-1T 8RF18-2T	8RF22-1T 8RF22-2T	8RF26-1T 8RF26-2T	8RF30-1T 8RF30-2T
UPLIFT	SAFE LOAD (LBS/FT)	NR	675	1269 (16)	1797 (9)	2326 (5)	2854 (2)	3382	3911
			675	1269	1797	2326	2854	3382	3911
	MOMENT (FT-LB)	NR	3089 (29)	4549 (17)	8869 (34)	12321 (36)	15564 (36)	18822 (36)	22094 (36)
			4184 (7)	5555	11086 (2)	17966 (18)	26020 (28)	35130 (35)	42226 (37)
	SHEAR (LBS)	NR	1688	3385	4794	6202	7611	9020	10429
			1688	3385	4794	6202	7611	9020	10429

	U-LINTEL TYPE	8RU6	8RF6	RCMU
LATERAL	SAFE LOAD (LBS/FT)	408	407	655
	MOMENT (FT-LB)	1272	1272	2328
	SHEAR (LBS)	1469	1946	1806

4'-7" TO 5'-8" HIGH STRENGTH RECESS LINTEL
GRAVITY LOAD / DEFLECTION GRAPH

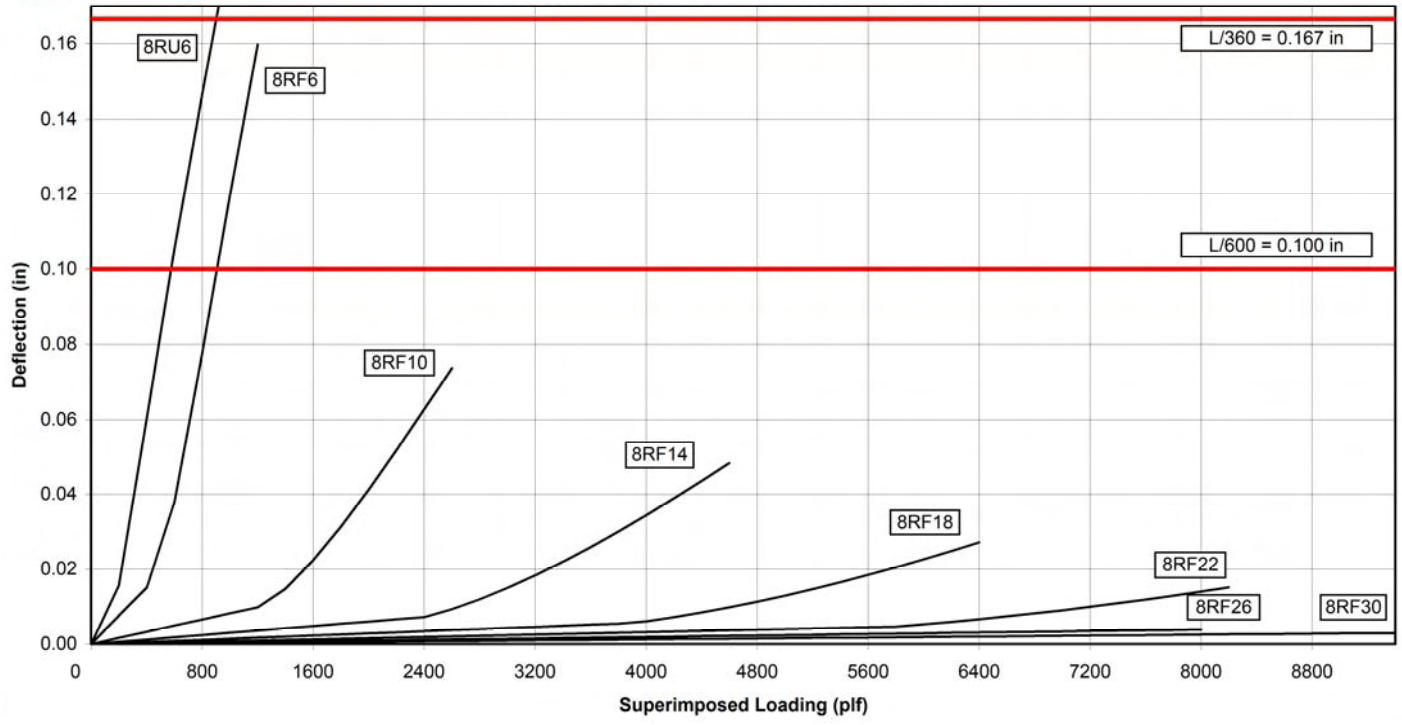

© 2015 Cast-Crete USA, Inc.

8 INCH RECESS U-LINTEL LENGTHS 5'-9" TO 5'-10"

DATA SHEET

	U-LINTEL TYPE	8RU6	8RF6-0B	8RF10-0B	8RF14-0B	8RF18-0B	8RF22-0B	8RF26-0B	8RF30-0B
			8RF6-1B	8RF10-1B	8RF14-1B	8RF18-1B	8RF22-1B	8RF26-1B	8RF30-1B
GRAVITY	SAFE LOAD (LBS/FT)	810	859	1653	1600	2124	2649	3174	3700
			1113	2342	4242	6639 (10)	8060 (39)	7402 (19)	8706 (19)
	MOMENT (FT-LB)	2702	2866	5516	5340	7088	8838	10591	12346
			4856 (12)	11251 (16)	17750 (17)	24265 (18)	30809 (46)	24700 (19)	29051 (19)
	SHEAR (LBS)	1829	2074	3586	5081	6523	7973	9441	10893
			2074	3586	5081	6523	7973	9441	10893

	U-LINTEL TYPE	8RU6	8RF6-1T	8RF10-1T	8RF14-1T	8RF18-1T	8RF22-1T	8RF26-1T	8RF30-1T
			8RF6-2T	8RF10-2T	8RF14-2T	8RF18-2T	8RF22-2T	8RF26-2T	8RF30-2T
UPLIFT	SAFE LOAD (LBS/FT)	NR	655	1207 (16)	1746 (11)	2259 (7)	2773 (5)	3286 (3)	3799 (1)
			655	1233	1746	2259	2773	3286	3799
	MOMENT (FT-LB)	NR	3098 (29)	4566 (16)	8893 (34)	12351 (36)	15601 (36)	18866 (36)	22144 (36)
			4193 (7)	5571	11109 (2)	17996 (18)	26057 (28)	35174 (35)	42277 (37)
	SHEAR (LBS)	NR	1692	3391	4802	6214	7625	9036	10448
			1692	3391	4802	6214	7625	9036	10448

	U-LINTEL TYPE	8RU6	8RF6	RCMU
LATERAL	SAFE LOAD (LBS/FT)	382	381	616
	MOMENT (FT-LB)	1272	1272	2328
	SHEAR (LBS)	1469	1946	1806

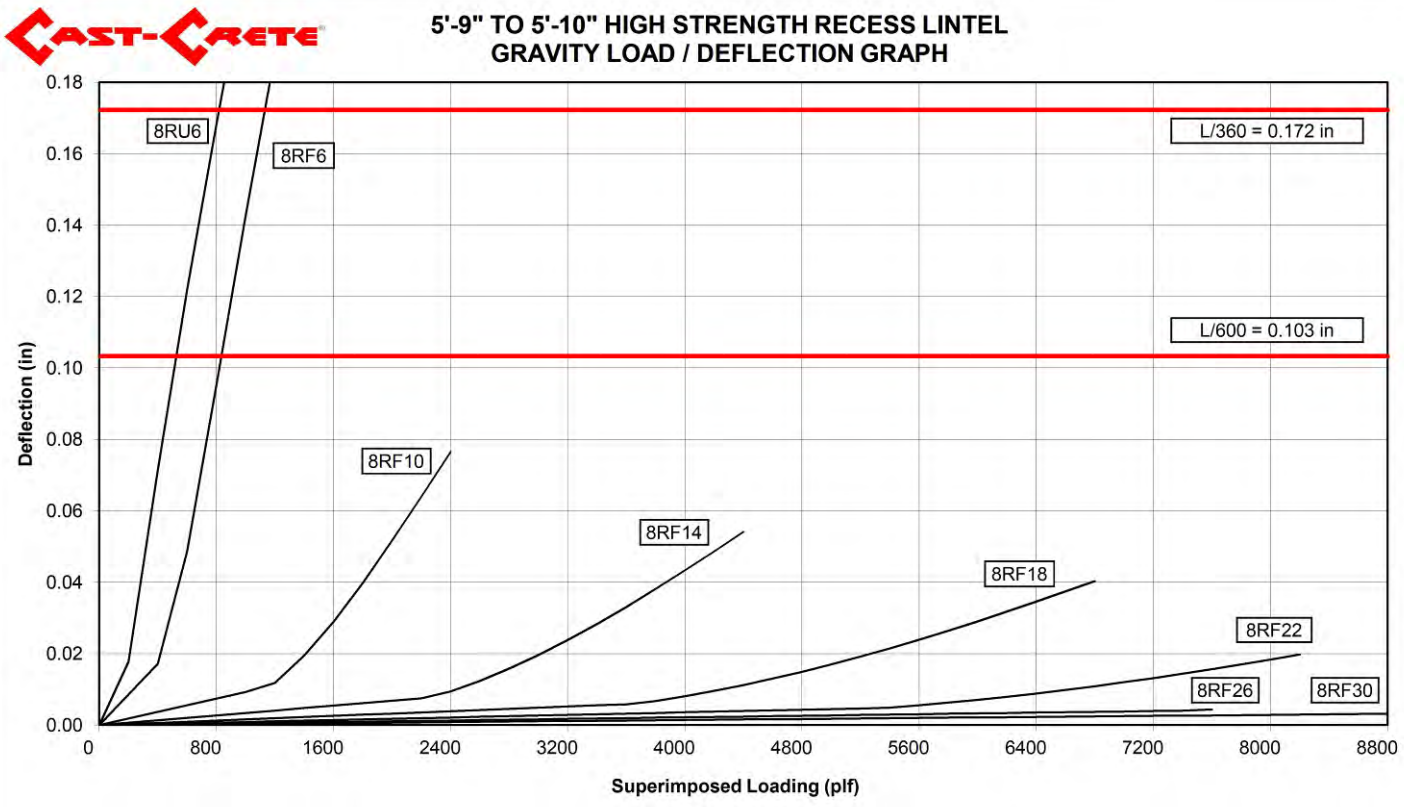

© 2015 Cast-Crete USA, Inc.

8 INCH RECESS U-LINTEL LENGTHS 5'-11" TO 6'-8"

DATA SHEET

	U-LINTEL TYPE	8RU6	8RF6-0B 8RF6-1B	8RF10-0B 8RF10-1B	8RF14-0B 8RF14-1B	8RF18-0B 8RF18-1B	8RF22-0B 8RF22-1B	8RF26-0B 8RF26-1B	8RF30-0B 8RF30-1B
GRAVITY	SAFE LOAD (LBS/FT)	797	901	1825	3120	5048	7747	9448	7360
			901	1825	3120	5048	7915	9479	10893 (32)
	MOMENT (FT-LB)	4316	4964	12098	19659	27241	34864	42514	33118
			6467 (6)	14930 (11)	23583 (12)	32260 (13)	40993 (13)	62086 (31)	73610 (55)
	SHEAR (LBS)	1817	2056	3555	5038	6467	7905	9360	10830
			2056	3555	5038	6467	7905	9360	10830

	U-LINTEL TYPE	8RU6	8RF6-1T 8RF6-2T	8RF10-1T 8RF10-2T	8RF14-1T 8RF14-2T	8RF18-1T 8RF18-2T	8RF22-1T 8RF22-2T	8RF26-1T 8RF26-2T	8RF30-1T 8RF30-2T
UPLIFT	SAFE LOAD (LBS/FT)	NR	570	929 (16)	1530 (22)	1980 (19)	2429 (16)	2879 (15)	3329 (14)
			570	1080	1530	1980	2429	2879	3329
	MOMENT (FT-LB)	NR	4790 (15)	4657 (16)	9021 (34)	12517 (35)	15803 (36)	19105 (36)	22420 (36)
			6272 (13)	5663	11238 (2)	18161 (17)	26260 (28)	35413 (35)	42553 (37)
	SHEAR (LBS)	NR	1710	3422	4846	6269	7693	9117	10541
			1710	3422	4846	6269	7693	9117	10541

	U-LINTEL TYPE	8RU6	8RF6	RCMU
LATERAL	SAFE LOAD (LBS/FT)	595	788	464
	MOMENT (FT-LB)	5052	5052	2328
	SHEAR (LBS)	1469	1946	1806

5'-11" TO 6'-8" HIGH STRENGTH RECESS LINTEL GRAVITY LOAD / DEFLECTION GRAPH

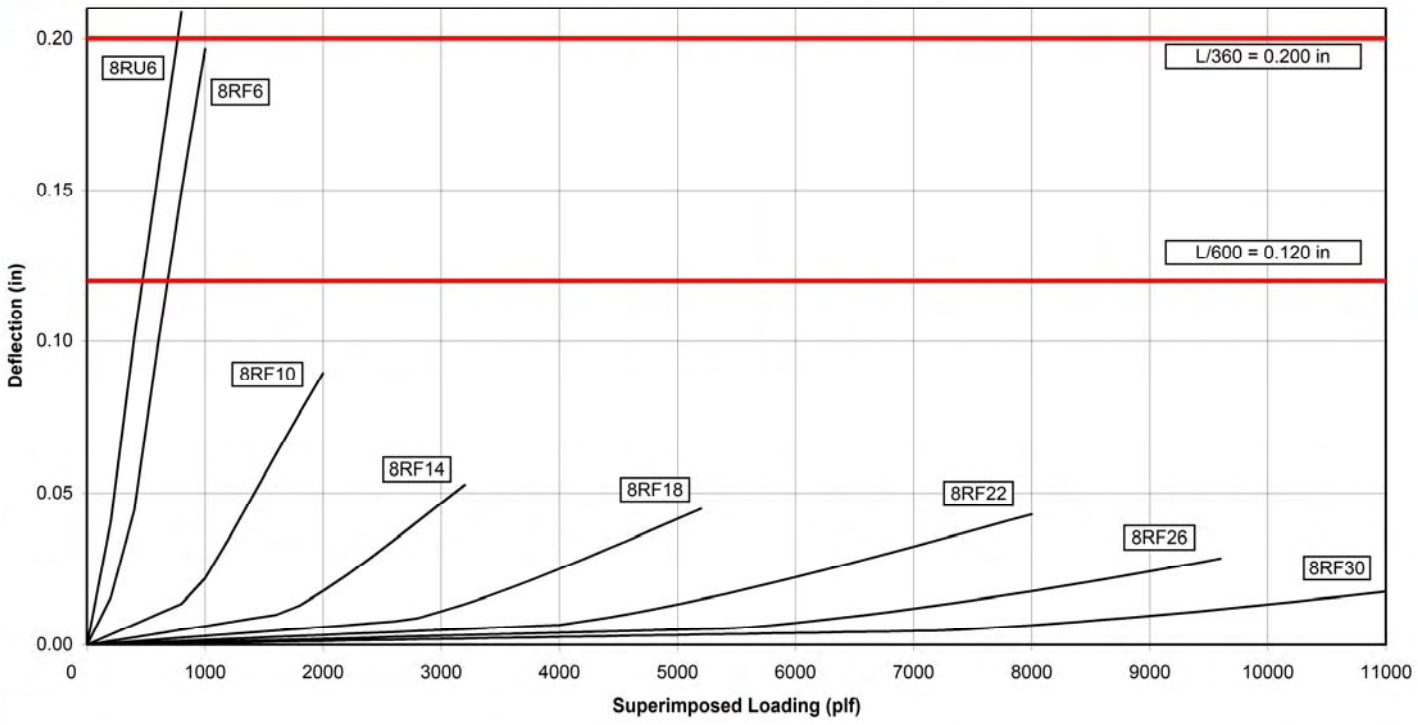

© 2015 Cast-Crete USA, Inc.

8 INCH RECESS U-LINTEL LENGTHS 6'-9" TO 7'-6"

DATA SHEET

	U-LINTEL TYPE	8RU6	8RF6-0B 8RF6-1B	8RF10-0B 8RF10-1B	8RF14-0B 8RF14-1B	8RF18-0B 8RF18-1B	8RF22-0B 8RF22-1B	8RF26-0B 8RF26-1B	8RF30-0B 8RF30-1B
GRAVITY	SAFE LOAD (LBS/FT)	669	755	1490	2459	3776	5743	7239	5623
			755	1490	2459	3776	5743	8998 (19)	10893 (48)
	MOMENT (FT-LB)	4279	4905	11999	19520	27062	34645	42255	32819
			6408 (6)	14831 (11)	23444 (12)	32081 (13)	40774 (13)	61827 (31)	73311 (55)
	SHEAR (LBS)	1805	2037	3524	4995	6411	7836	9279	10737
			2037	3524	4995	6411	7836	9279	10737

	U-LINTEL TYPE	8RU6	8RF6-1T 8RF6-2T	8RF10-1T 8RF10-2T	8RF14-1T 8RF14-2T	8RF18-1T 8RF18-2T	8RF22-1T 8RF22-2T	8RF26-1T 8RF26-2T	8RF30-1T 8RF30-2T
UPLIFT	SAFE LOAD (LBS/FT)	NR	506	742 (16)	1364 (30)	1765 (27)	2166 (25)	2567 (24)	2968 (23)
			506	898	1364	1765	2166	2567	2968
	MOMENT (FT-LB)	NR	4849 (15)	4761 (16)	9167 (33)	12705 (35)	16034 (35)	19378 (35)	22735 (35)
			6331 (13)	5767	11384 (2)	18350 (17)	26490 (28)	35686 (35)	42868 (36)
	SHEAR (LBS)	NR	1728	3452	4889	6325	7762	9198	10635
			1728	3452	4889	6325	7762	9198	10635

	U-LINTEL TYPE	8RU6	8RF6	RCMU
LATERAL	SAFE LOAD (LBS/FT)	509	674	363
	MOMENT (FT-LB)	5052	5052	2328
	SHEAR (LBS)	1469	1946	1806

6'-9" TO 7'-6" HIGH STRENGTH RECESS LINTEL GRAVITY LOAD / DEFLECTION GRAPH

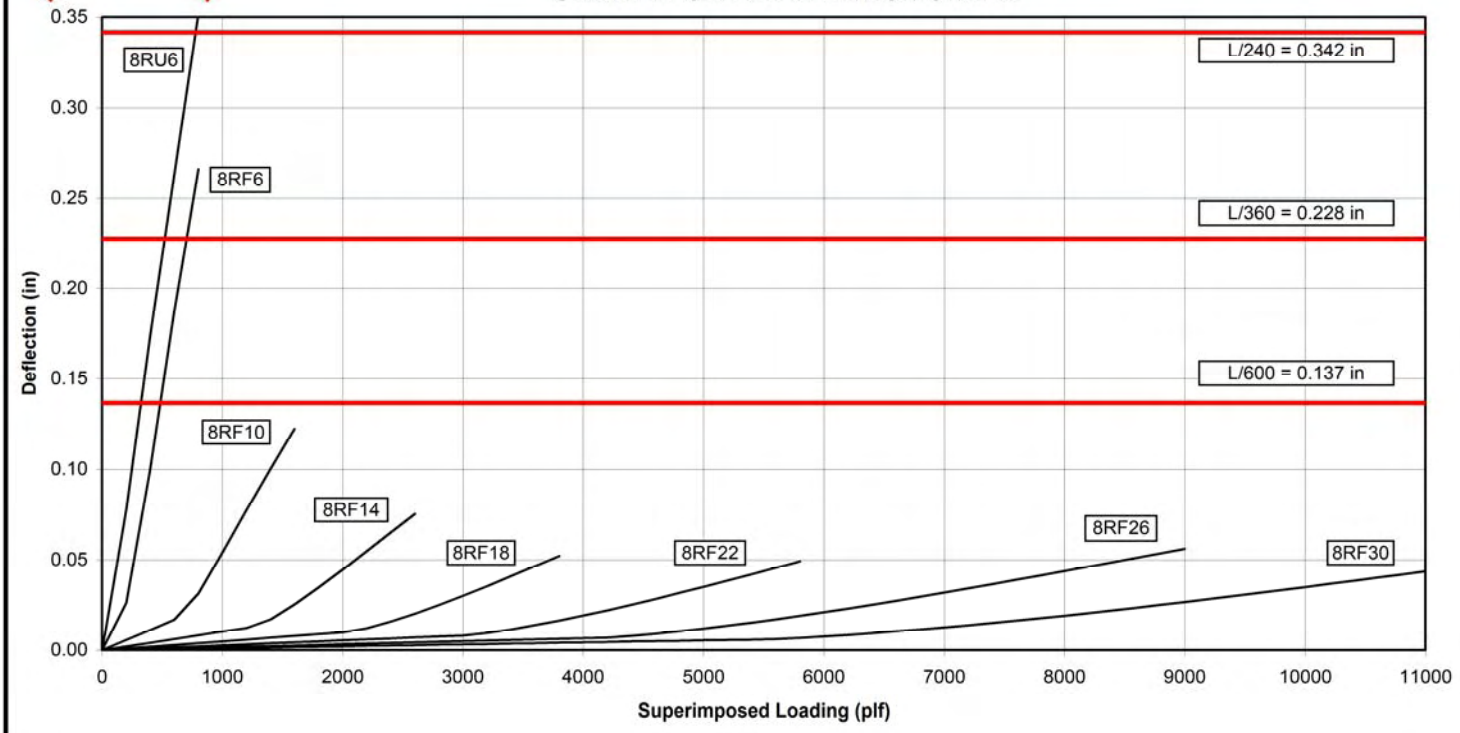

© 2015 Cast-Crete USA, Inc.

8 INCH RECESS U-LINTEL LENGTHS 7'-7" TO 9'-8"

DATA SHEET

	U-LINTEL TYPE	8RU6	8RF6-0B	8RF10-0B	8RF14-0B	8RF18-0B	8RF22-0B	8RF26-0B	8RF30-0B
			8RF6-1B	8RF10-1B	8RF14-1B	8RF18-1B	8RF22-1B	8RF26-1B	8RF30-1B
GRAVITY	SAFE LOAD (LBS/FT)	411	466	999	1568	2253	3129	4091	3146
			526	999	1568	2253	3129	4150	5891 (47)
	MOMENT (FT-LB)	4159	4717	11682	19074	26487	33942	41423	31858
			6220 (7)	14514 (11)	22998 (12)	31506 (13)	40071 (13)	60995 (31)	72350 (56)
	SHEAR (LBS)	1775	1990	3444	4882	6266	7659	9069	10494
			1990	3444	4882	6266	7659	9069	10494

	U-LINTEL TYPE	8RU6	8RF6-1T	8RF10-1T	8RF14-1T	8RF18-1T	8RF22-1T	8RF26-1T	8RF30-1T
			8RF6-2T	8RF10-2T	8RF14-2T	8RF18-2T	8RF22-2T	8RF26-2T	8RF30-2T
UPLIFT	SAFE LOAD (LBS/FT)	NR	395	468 (15)	884 (32)	1222 (33)	1540 (34)	1859 (34)	2180 (34)
			395	560	1072	1386	1701	2016	2331
	MOMENT (FT-LB)	NR	5038 (14)	5092 (15)	9632 (32)	13304 (33)	16766 (34)	20245 (34)	23736 (34)
			6520 (13)	6097	11849 (2)	18948 (17)	27223 (27)	36553 (34)	43869 (35)
	SHEAR (LBS)	NR	1776	3533	5002	6470	7939	9408	10877
			1776	3533	5002	6470	7939	9408	10877

	U-LINTEL TYPE	8RU6	8RF6	RCMU
LATERAL	SAFE LOAD (LBS/FT)	370	490	218
	MOMENT (FT-LB)	5052	5052	2328
	SHEAR (LBS)	1469	1946	1806

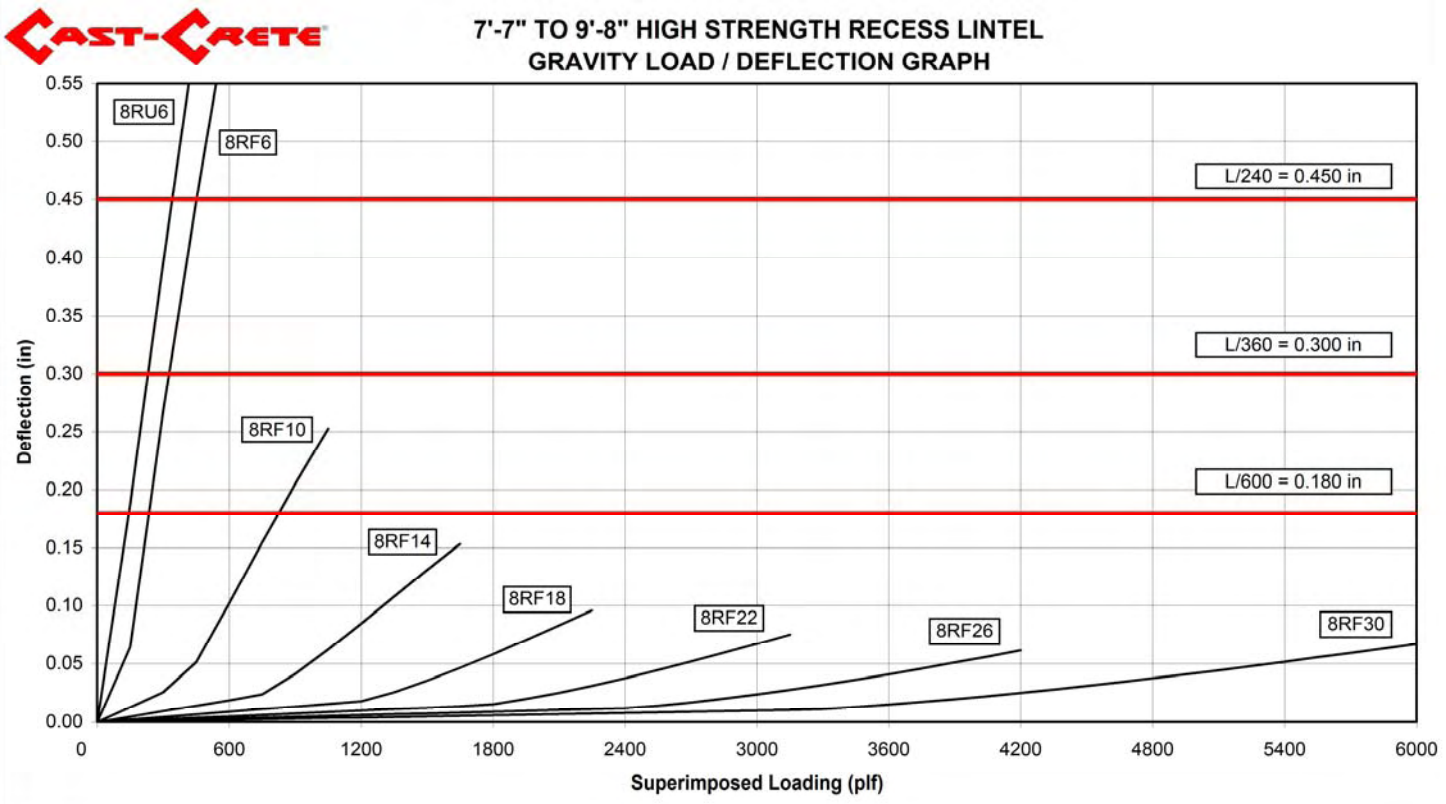

 © 2015 Cast-Crete USA, Inc.

12 INCH U-LINTEL LENGTHS 2'-8" TO 3'-6"

DATA SHEET

	U-LINTEL TYPE	12U8	12F8-2B	12F12-2B	12F16-2B	12F20-2B	12F24-2B	12F28-2B	12F32-2B
GRAVITY	SAFE LOAD (LBS/FT)	3428	5000	5838	7619	9352	11060	12755	14438
	MOMENT (FT-LB)	8425	19502 (13)	27591 (15)	39653 (15)	51833 (15)	64090 (16)	76402 (16)	88752 (44)
	SHEAR (LBS)	3390	4917	5759	7575	9352	11060	12755	14438

	U-LINTEL TYPE	12U8	12F8-2T	12F12-2T	12F16-2T	12F20-2T	12F24-2T	12F28-2T	8F32-2T
UPLIFT	SAFE LOAD (LBS/FT)	NR	2752	4287	5613	6938	8264	9589	10915
	MOMENT (FT-LB)	NR	9509 (31)	10630 (15)	18684 (31)	26793 (37)	33094 (37)	39427 (37)	45785 (37)
	SHEAR (LBS)	NR	4357	6789	8888	10986	13085	15184	17283

	U-LINTEL TYPE	12U8	12F8	RCMU
LATERAL	SAFE LOAD (LBS/FT)	1295	4841	3933 (13)
	MOMENT (FT-LB)	8674	21592 (19)	5868 (27)
	SHEAR (LBS)	1295	4841	3135

2'-8" to 3'-6" HIGH STRENGTH LINTEL GRAVITY LOAD / DEFLECTION GRAPH

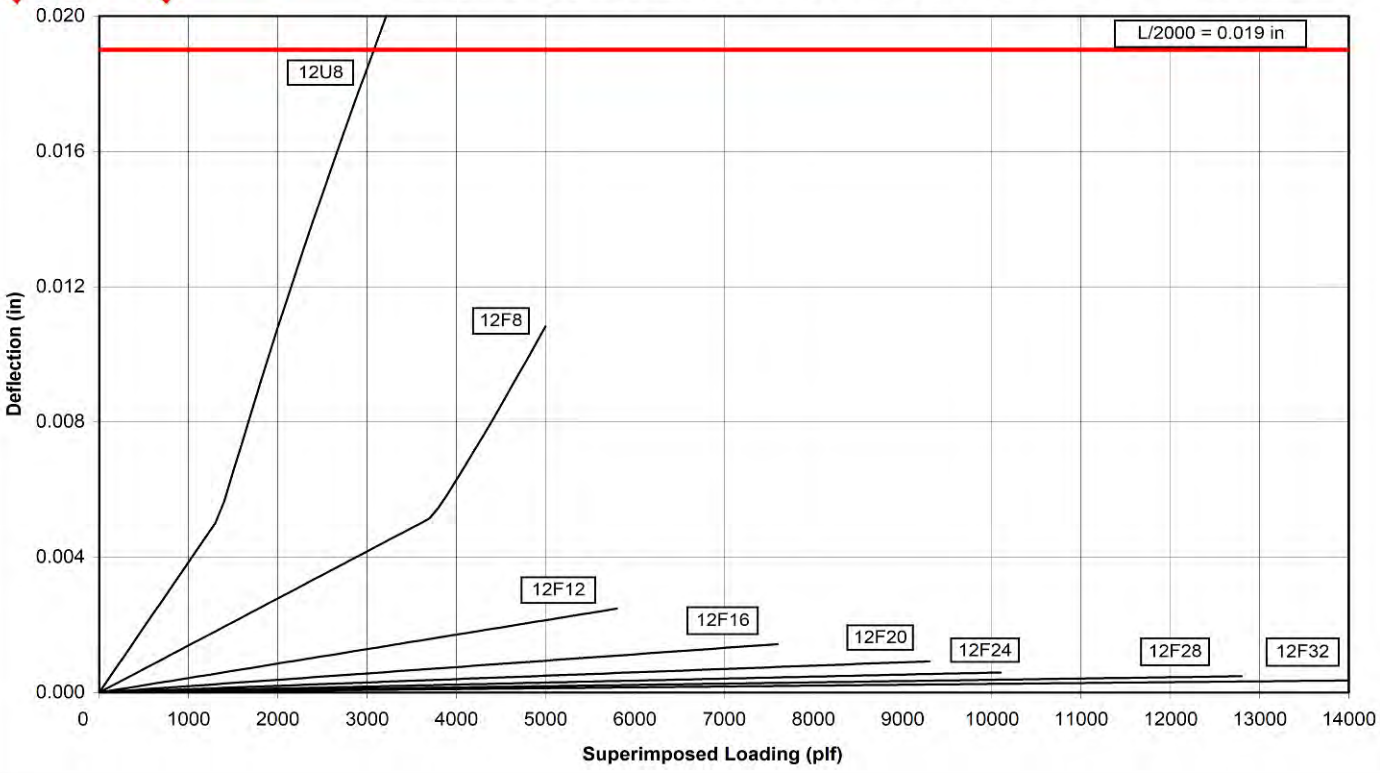

© 2015 Cast-Crete USA, Inc.

12 INCH U-LINTEL LENGTHS 3'-7" TO 4'-0"

DATA SHEET

	U-LINTEL TYPE	12U8	12F8-2B	12F12-2B	12F16-2B	12F20-2B	12F24-2B	12F28-2B	12F32-2B
GRAVITY	SAFE LOAD (LBS/FT)	2923	4232	5838	7619	9352	11060	12755	14438
	MOMENT (FT-LB)	8407	19462 (13)	27532 (15)	39575 (15)	51734 (15)	63972 (16)	76265 (16)	88595 (44)
	SHEAR (LBS)	3379	4894	5724	7529	9316	11060	12755	14438

	U-LINTEL TYPE	12U8	12F8-2T	12F12-2T	12F16-2T	12F20-2T	12F24-2T	12F28-2T	8F32-2T
UPLIFT	SAFE LOAD (LBS/FT)	NR	2389	3721	4872	6023	7174	8325	9477
	MOMENT (FT-LB)	NR	9549 (31)	10689 (15)	18762 (31)	26892 (37)	33212 (37)	39565 (37)	45942 (37)
	SHEAR (LBS)	NR	4380	6823	8934	11044	13154	15265	17375

	U-LINTEL TYPE	12U8	12F8	RCMU
LATERAL	SAFE LOAD (LBS/FT)	1295	4841	2994 (14)
	MOMENT (FT-LB)	8674	21592 (19)	5868 (27)
	SHEAR (LBS)	1295	4841	3135

3'-7" to 4'-0" HIGH STRENGTH LINTEL GRAVITY LOAD / DEFLECTION GRAPH

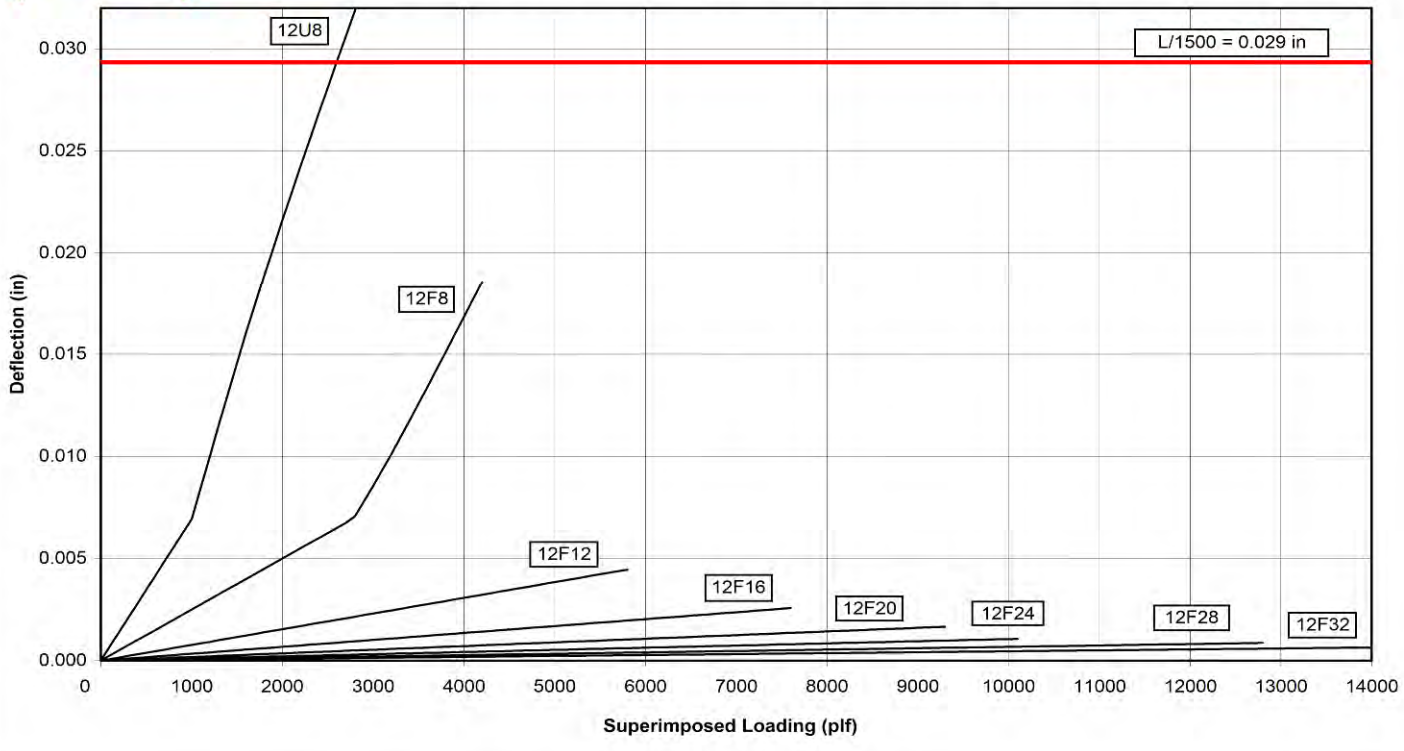

© 2015 Cast-Crete USA, Inc.

12 INCH U-LINTEL LENGTHS 4'-1" TO 4'-6"

DATA SHEET

	U-LINTEL TYPE	12U8	12F8-2B	12F12-2B	12F16-2B	12F20-2B	12F24-2B	12F28-2B	12F32-2B
GRAVITY	SAFE LOAD (LBS/FT)	2396	3464	5304	7619	9352	11060	12755	14438
	MOMENT (FT-LB)	8387	19417 (14)	27465 (15)	39485 (15)	51622 (15)	63837 (16)	76107 (16)	88414 (44)
	SHEAR (LBS)	3369	4871	5690	7483	9259	11040	12755	14438

	U-LINTEL TYPE	12U8	12F8-2T	12F12-2T	12F16-2T	12F20-2T	12F24-2T	12F28-2T	8F32-2T
UPLIFT	SAFE LOAD (LBS/FT)	NR	2113	3291	4310	5328	6347	7365	8384
	MOMENT (FT-LB)	NR	9594 (31)	10757 (15)	18853 (31)	27004 (37)	33347 (37)	39722 (37)	46122 (37)
	SHEAR (LBS)	NR	4403	6858	8980	11101	13223	15345	17467

	U-LINTEL TYPE	12U8	12F8	RCMU
LATERAL	SAFE LOAD (LBS/FT)	1049	3922	2417 (18)
	MOMENT (FT-LB)	8674	21592 (19)	5868 (27)
	SHEAR (LBS)	1295	4841	3135

4'-1" to 4'-6" HIGH STRENGTH LINTEL GRAVITY LOAD / DEFLECTION GRAPH

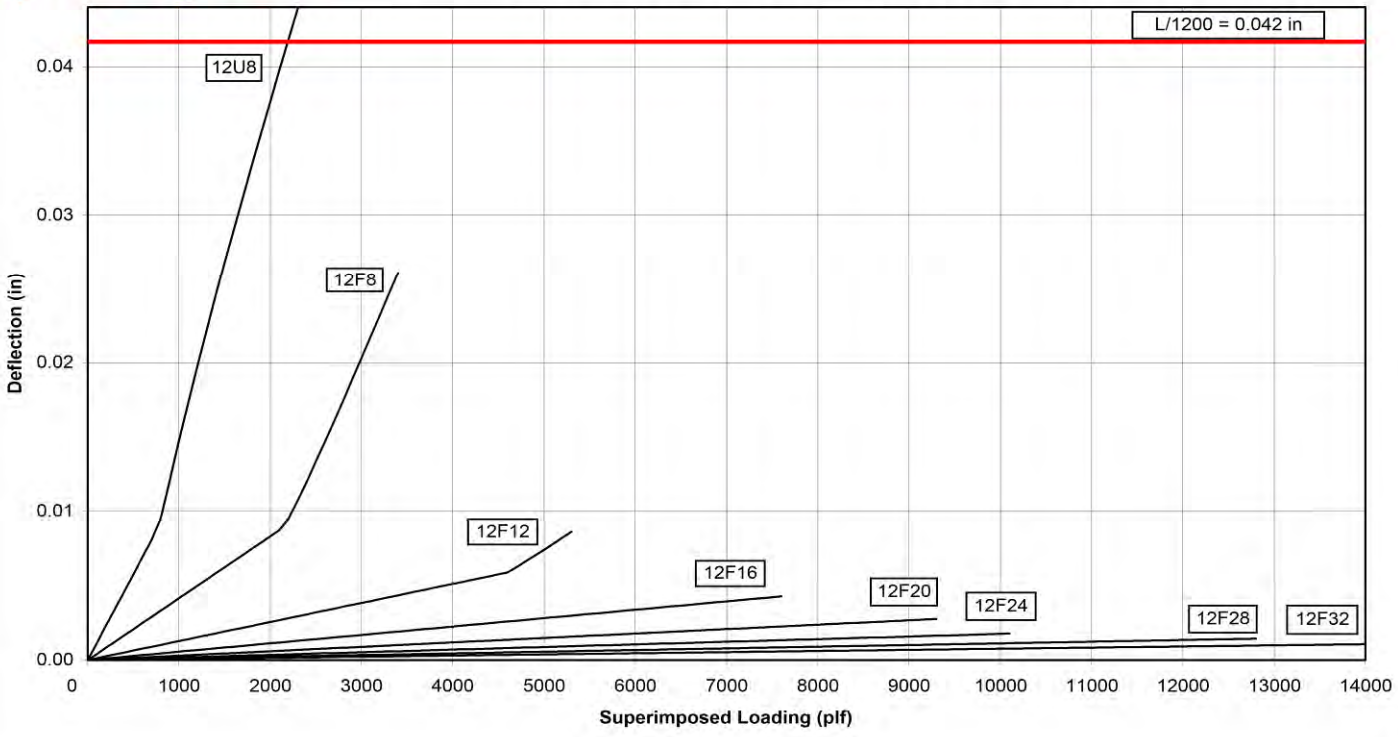

© 2015 Cast-Crete USA, Inc.

12 INCH U-LINTEL LENGTHS 4'-7" TO 5'-10"

DATA SHEET

	U-LINTEL TYPE	12U8	12F8-2B	12F12-2B	12F16-2B	12F20-2B	12F24-2B	12F28-2B	12F32-2B
GRAVITY	SAFE LOAD (LBS/FT)	1612	2320	3218	5234	8487	11060	12755	14438 (11)
	MOMENT (FT-LB)	8319	19269 (14)	27242 (15)	39188 (15)	51251 (16)	63392 (16)	75588 (16)	87822 (45)
	SHEAR (LBS)	3341	4809	5598	7360	9105	10856	12624	14411

	U-LINTEL TYPE	12U8	12F8-2T	12F12-2T	12F16-2T	12F20-2T	12F24-2T	12F28-2T	8F32-2T
UPLIFT	SAFE LOAD (LBS/FT)	NR	1623	2527 (2)	3310	4092	4875	5658	6441
	MOMENT (FT-LB)	NR	9742 (30)	10979 (15)	19149 (30)	27375 (36)	33792 (36)	40241 (36)	46715 (36)
	SHEAR (LBS)	NR	4464	6950	9102	11255	13407	15560	17712

	U-LINTEL TYPE	12U8	12F8	RCMU
LATERAL	SAFE LOAD (LBS/FT)	681	2547	1552 (27)
	MOMENT (FT-LB)	8674	21592 (19)	5868 (27)
	SHEAR (LBS)	1295	4841	3135

4'-7" to 5'-10" HIGH STRENGTH LINTEL GRAVITY LOAD / DEFLECTION GRAPH

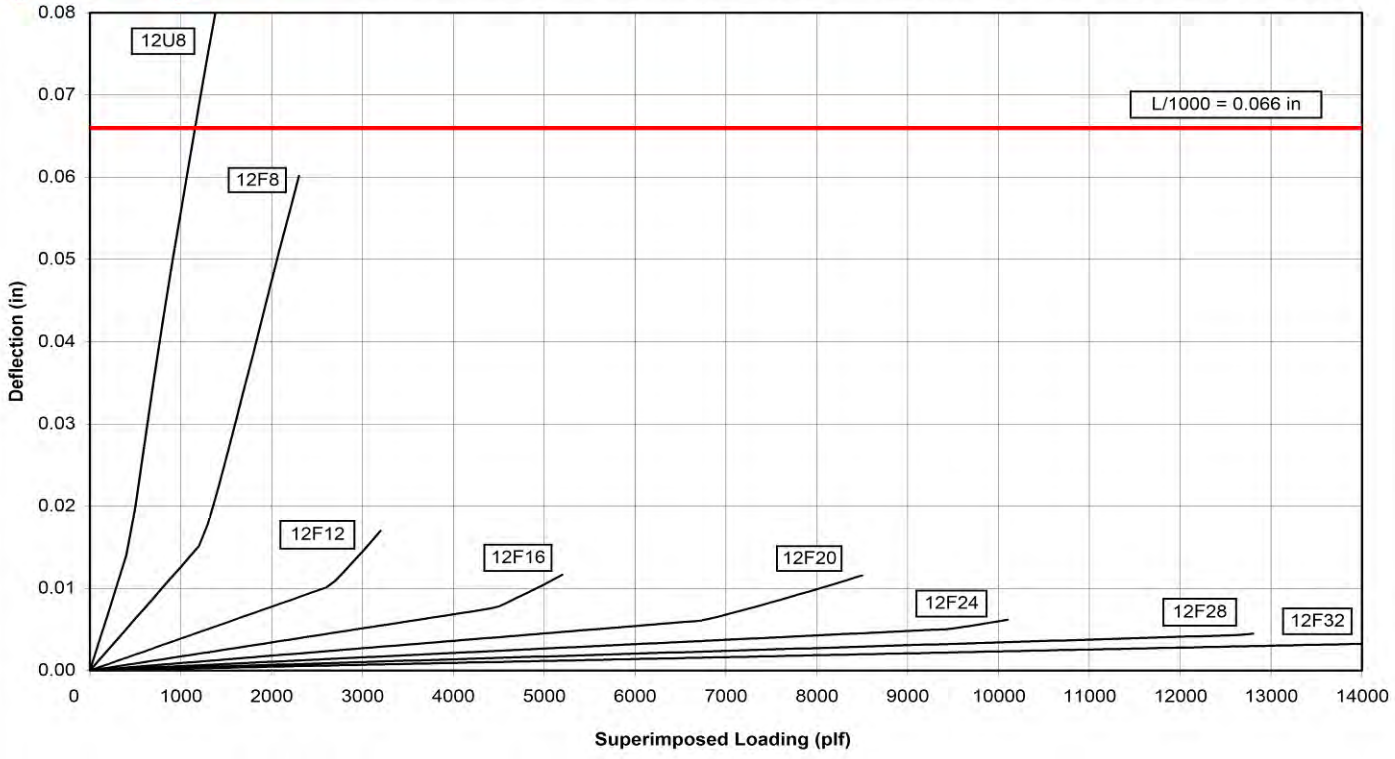

© 2015 Cast-Crete USA, Inc.

12 INCH U-LINTEL LENGTHS 5'-11" TO 6'-6"

DATA SHEET

	U-LINTEL TYPE	12U8	12F8-2B	12F12-2B	12F16-2B	12F20-2B	12F24-2B	12F28-2B	12F32-2B
GRAVITY	SAFE LOAD (LBS/FT)	1383	1986	2679	4196	6421	10032	12755	14438 (30)
	MOMENT (FT-LB)	8278	19180 (14)	27108 (15)	39009 (15)	51028 (16)	63124 (16)	75275 (16)	87464 (45)
	SHEAR (LBS)	3327	4779	5552	7299	9029	10764	12517	14289

	U-LINTEL TYPE	12U8	12F8-2T	12F12-2T	12F16-2T	12F20-2T	12F24-2T	12F28-2T	8F32-2T
UPLIFT	SAFE LOAD (LBS/FT)	NR	1444	2269 (12)	2972 (4)	3675	4378	5081	5784
	MOMENT (FT-LB)	NR	9831 (30)	11113 (14)	19328 (30)	27598 (36)	34060 (36)	40554 (36)	47073 (36)
	SHEAR (LBS)	NR	4495	6996	9164	11331	13499	15667	17835

	U-LINTEL TYPE	12U8	12F8	RCMU
LATERAL	SAFE LOAD (LBS/FT)	579	2167	1234 (27)
	MOMENT (FT-LB)	8674	21592 (19)	5868 (27)
	SHEAR (LBS)	1295	4841	3135

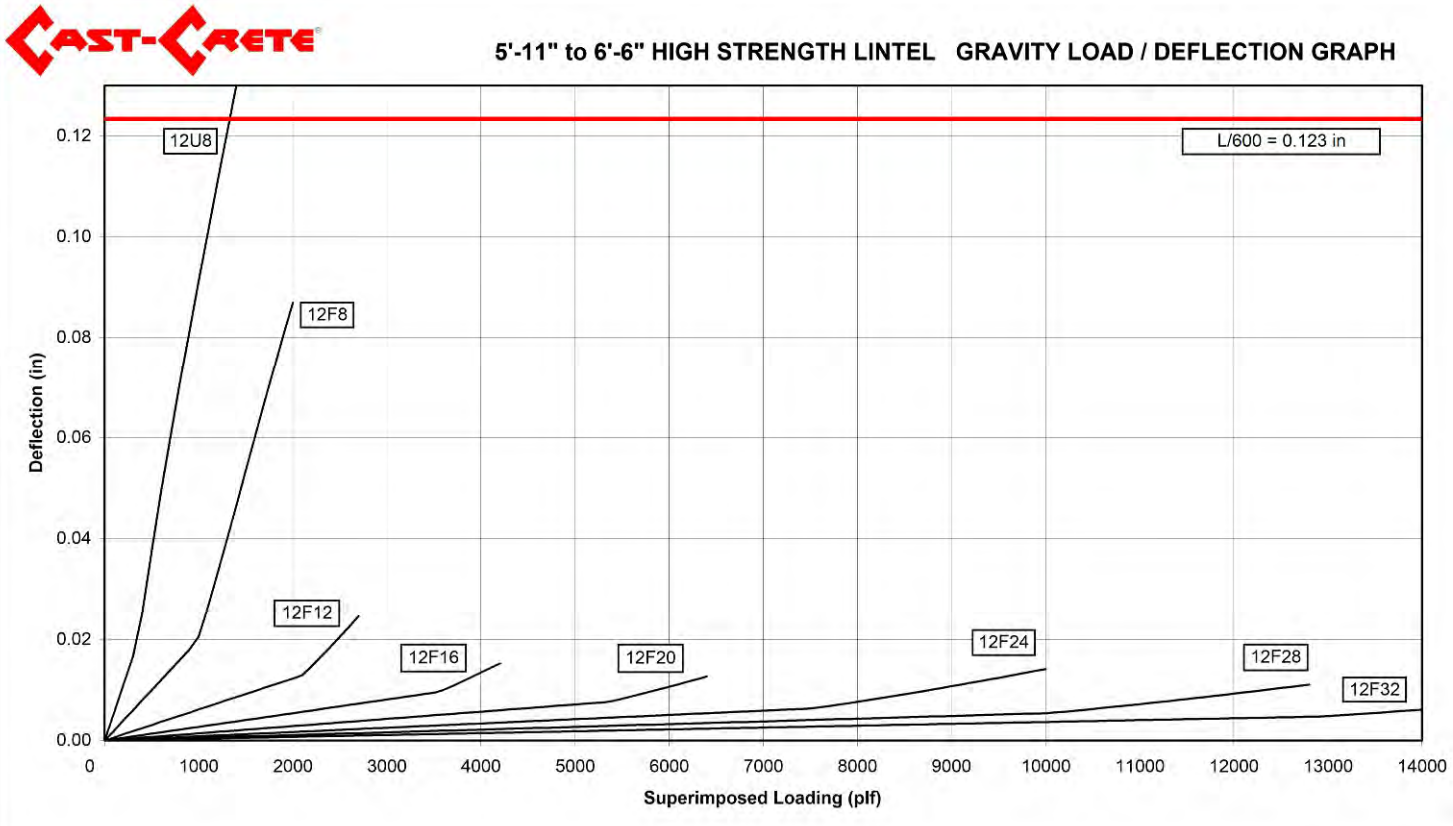

12 INCH U-LINTEL LENGTHS 6'-7" TO 7'-6"

DATA SHEET

GRAVITY	U-LINTEL TYPE	12U8	12F8-2B	12F12-2B	12F16-2B	12F20-2B	12F24-2B	12F28-2B	12F32-2B
	SAFE LOAD (LBS/FT)	1138	1628	2131	3218	4676	6756	9763	13528 (46)
	MOMENT (FT-LB)	8208	19026 (14)	26878 (15)	38703 (16)	50644 (16)	62664 (16)	74739 (16)	86850 (45)
	SHEAR (LBS)	3306	4733	5483	7207	8914	10626	12356	14105

UPLIFT	U-LINTEL TYPE	12U8	12F8-2T	12F12-2T	12F16-2T	12F20-2T	12F24-2T	12F28-2T	8F32-2T
	SAFE LOAD (LBS/FT)	NR	1267 (14)	1767 (14)	2583 (16)	3194 (12)	3806 (9)	4417 (7)	5028 (5)
	MOMENT (FT-LB)	NR	9985 (30)	11343 (14)	19635 (29)	27982 (36)	34520 (36)	41091 (36)	47686 (36)
	SHEAR (LBS)	NR	4541	7065	9256	11446	13637	15828	18019

LATERAL	U-LINTEL TYPE	12U8	12F8	RCMU
	SAFE LOAD (LBS/FT)	474	1771	914 (27)
	MOMENT (FT-LB)	8674	21592 (19)	5868 (27)
	SHEAR (LBS)	1295	4841	3135

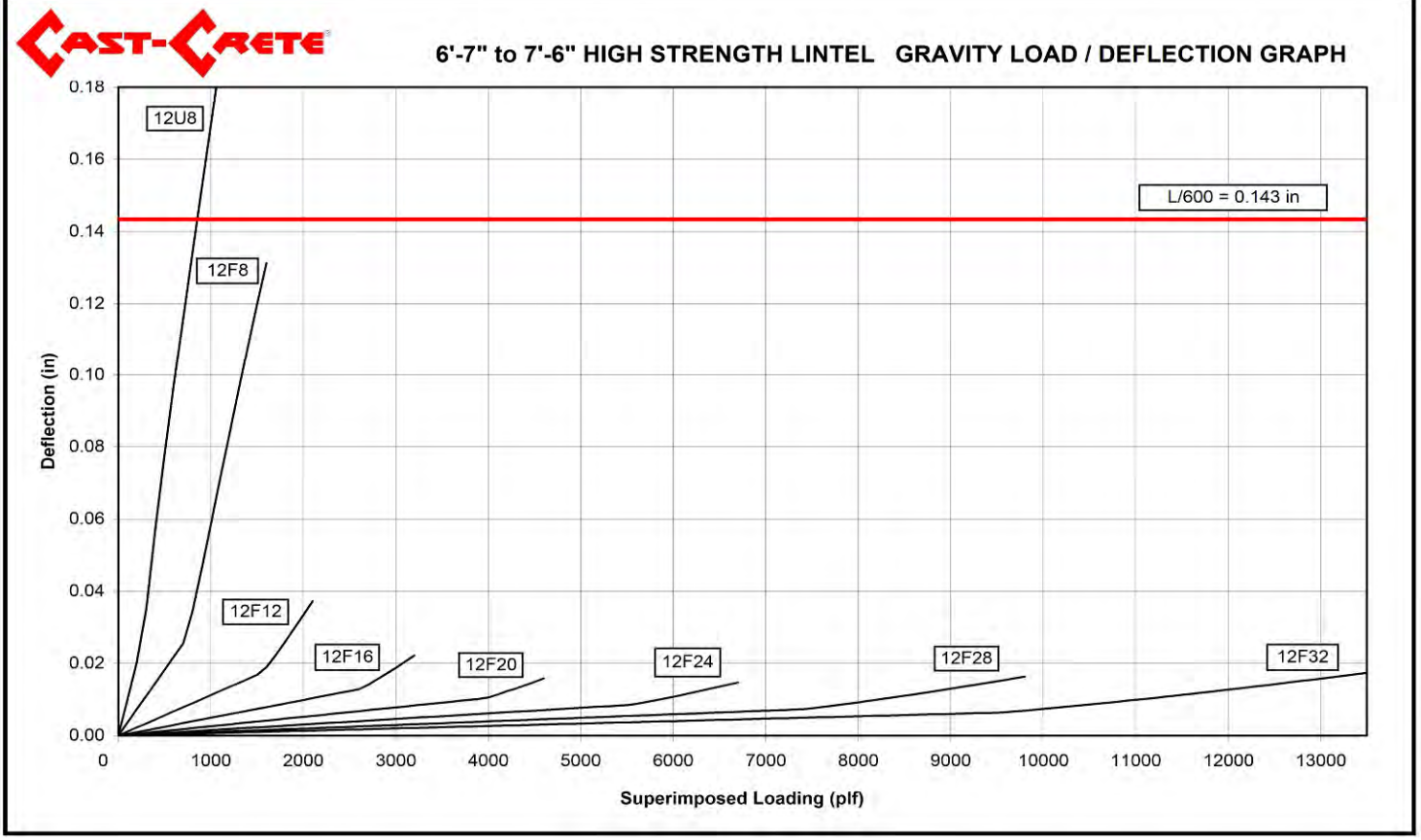

© 2015 Cast-Crete USA, Inc.

12 INCH U-LINTEL LENGTHS 7'-7" TO 9'-4"

DATA SHEET

	U-LINTEL TYPE	12U8	12F8-2B	12F12-2B	12F16-2B	12F20-2B	12F24-2B	12F28-2B	12F32-2B
GRAVITY	SAFE LOAD (LBS/FT)	795	1216	1535	2230	3083	4167	5593	7552 (40)
	MOMENT (FT-LB)	8053	18686 (14)	26367 (15)	38021 (16)	49792 (16)	61642 (16)	73546 (16)	85487 (46)
	SHEAR (LBS)	3267	4648	5356	7038	8703	10373	12061	13767

	U-LINTEL TYPE	12U8	12F8-2T	12F12-2T	12F16-2T	12F20-2T	12F24-2T	12F28-2T	8F32-2T
UPLIFT	SAFE LOAD (LBS/FT)	NR	1028 (9)	1171 (14)	2006 (28)	2590 (28)	3087 (26)	3583 (24)	4079 (22)
	MOMENT (FT-LB)	NR	13302 (29)	11855 (14)	20316 (28)	28834 (34)	35543 (35)	42284 (35)	49050 (35)
	SHEAR (LBS)	NR	4625	7191	9424	11657	13890	16123	18356

	U-LINTEL TYPE	12U8	12F8	RCMU
LATERAL	SAFE LOAD (LBS/FT)	355	1326	580 (27)
	MOMENT (FT-LB)	11652	24086 (16)	5868 (27)
	SHEAR (LBS)	1295	4841	3135

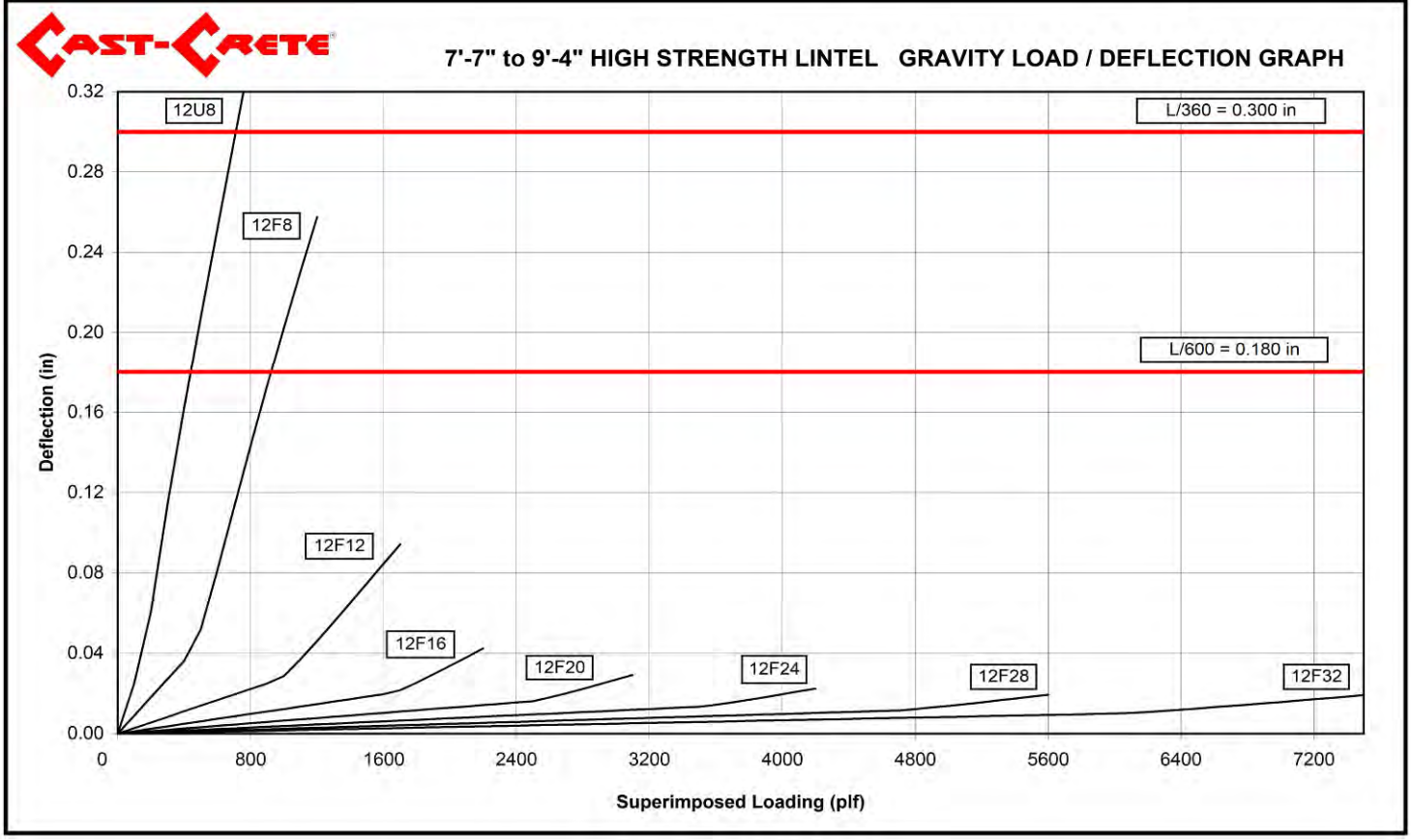

© 2015 Cast-Crete USA, Inc.

12 INCH U-LINTEL LENGTHS 9'-5" TO 10'-6"

DATA SHEET

	U-LINTEL TYPE	12U8	12F8-2B	12F12-2B	12F16-2B	12F20-2B	12F24-2B	12F28-2B	12F32-2B
GRAVITY	SAFE LOAD (LBS/FT)	614	1043	1295	1853	2516	3323	4334	5632 (38)
	MOMENT (FT-LB)	7935	18428 (14)	25981 (16)	37507 (16)	49149 (16)	60870 (16)	72646 (17)	84458 (46)
	SHEAR (LBS)	3243	4595	5276	6931	8569	10212	11873	13553

	U-LINTEL TYPE	12U8	12F8-2T	12F12-2T	12F16-2T	12F20-2T	12F24-2T	12F28-2T	8F32-2T
UPLIFT	SAFE LOAD (LBS/FT)	NR	920 (18)	947 (13)	1612 (28)	2281 (34)	2764 (33)	3209 (31)	3653 (30)
	MOMENT (FT-LB)	NR	13559 (28)	12240 (13)	20831 (28)	29477 (34)	36314 (34)	43184 (34)	50078 (34)
	SHEAR (LBS)	NR	4679	7272	9532	11791	14051	16311	18571

	U-LINTEL TYPE	12U8	12F8	RCMU
LATERAL	SAFE LOAD (LBS/FT)	306	1143	454 (27)
	MOMENT (FT-LB)	11652	24086 (16)	5868 (27)
	SHEAR (LBS)	1295	4841	3135

9'-5" to 10'-6" HIGH STRENGTH LINTEL GRAVITY LOAD / DEFLECTION GRAPH

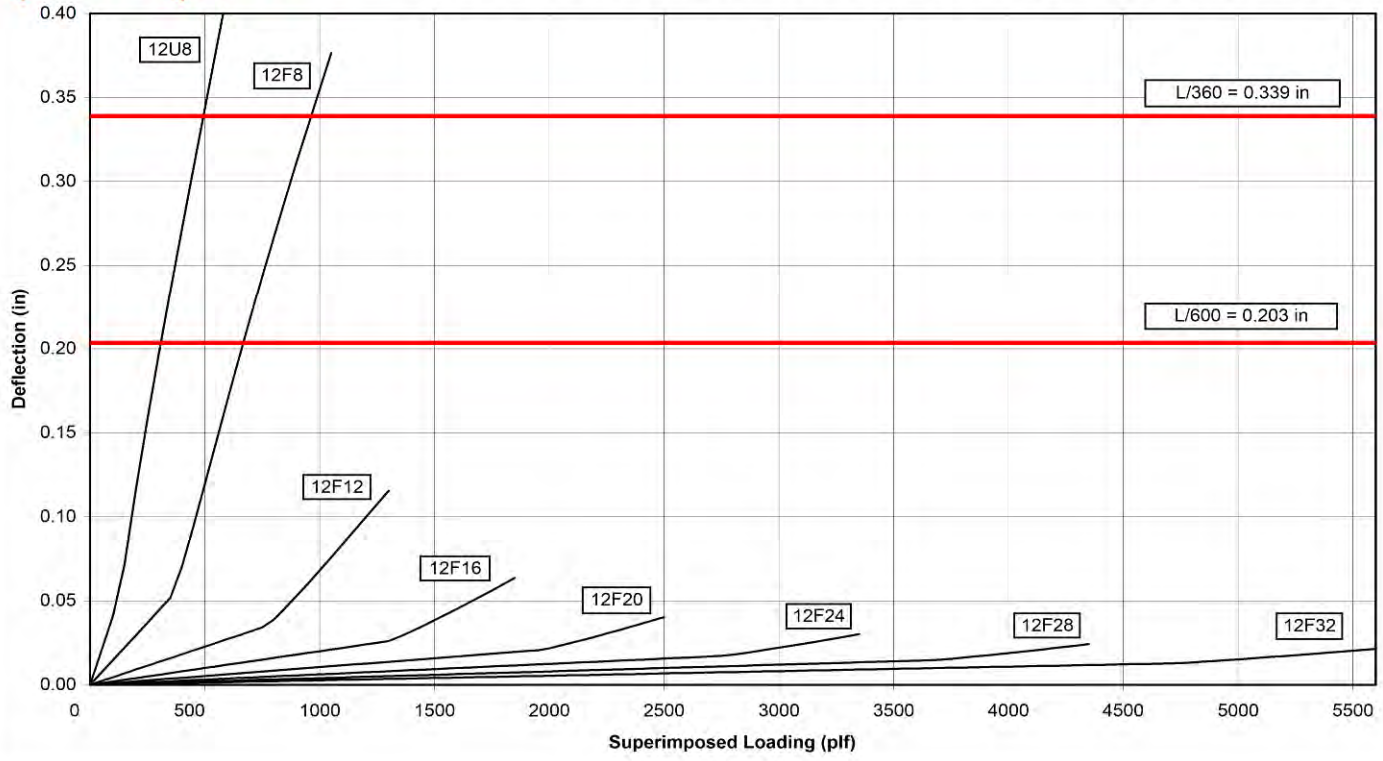

© 2015 Cast-Crete USA, Inc.

12 INCH U-LINTEL LENGTHS 10'-7" TO 11'-4"

DATA SHEET

	U-LINTEL TYPE	12U8	12F8-2B	12F12-2B	12F16-2B	12F20-2B	12F24-2B	12F28-2B	12F32-2B
GRAVITY	SAFE LOAD (LBS/FT)	518	945	1162	1649	2216	2893	3719	4746 (38)
	MOMENT (FT-LB)	7843	18226 (14)	25677 (16)	37101 (16)	48642 (16)	60262 (17)	71936 (17)	83647 (47)
	SHEAR (LBS)	3225	4556	5218	6854	8473	10097	11739	13399

	U-LINTEL TYPE	12U8	12F8-2T	12F12-2T	12F16-2T	12F20-2T	12F24-2T	12F28-2T	8F32-2T
UPLIFT	SAFE LOAD (LBS/FT)	NR	858 (24)	829 (13)	1404 (27)	1982 (33)	2441 (33)	2902 (33)	3364 (33)
	MOMENT (FT-LB)	NR	13762 (28)	12545 (13)	21236 (27)	29984 (33)	36923 (33)	43894 (33)	50890 (33)
	SHEAR (LBS)	NR	4717	7329	9608	11887	14166	16445	18724

	U-LINTEL TYPE	12U8	12F8	RCMU
LATERAL	SAFE LOAD (LBS/FT)	278	1041	388 (27)
	MOMENT (FT-LB)	11652	24086 (16)	5868 (27)
	SHEAR (LBS)	1295	4841	3135

10'-7" to 11'-4" HIGH STRENGTH LINTEL GRAVITY LOAD / DEFLECTION GRAPH

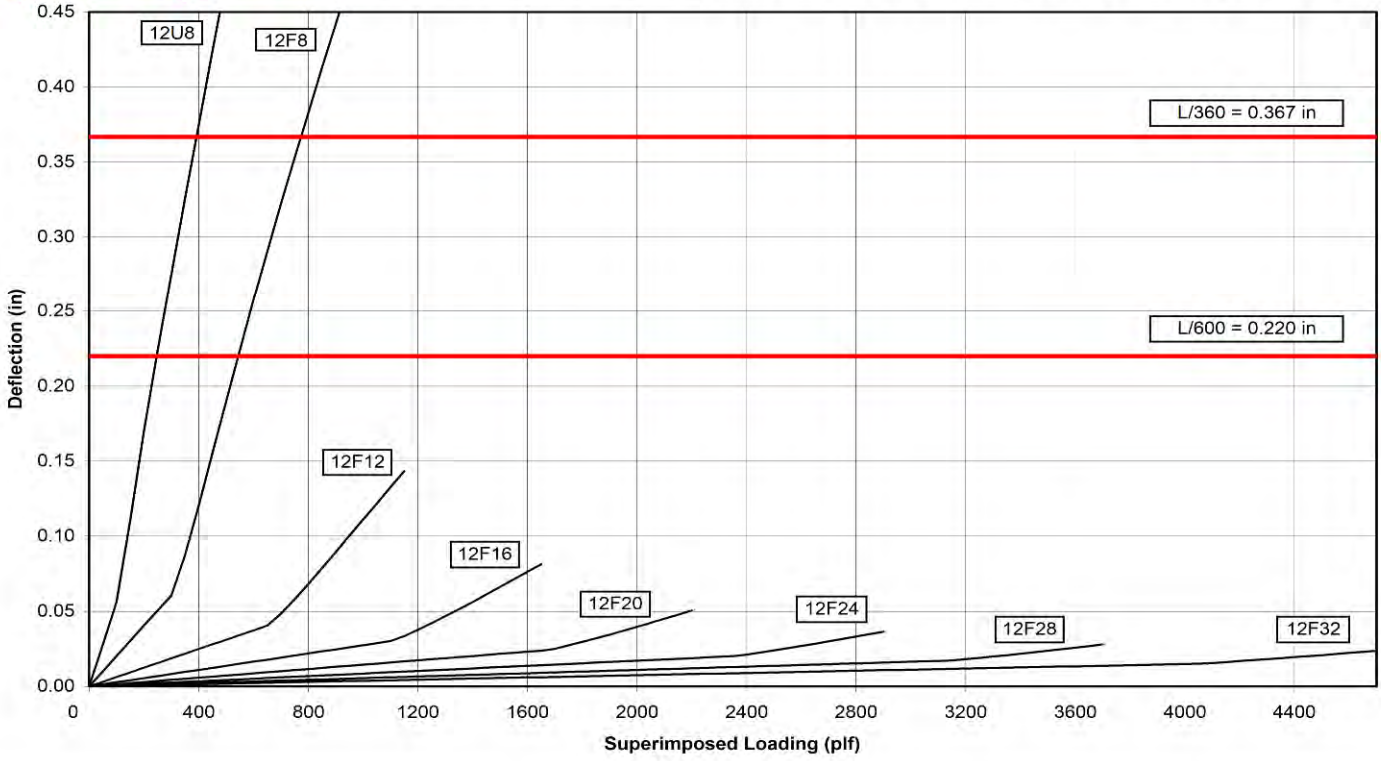

© 2015 Cast-Crete USA, Inc.

12 INCH U-LINTEL LENGTHS 11'-5" TO 12'-0"

DATA SHEET

	U-LINTEL TYPE	12U8	12F8-2B	12F12-2B	12F16-2B	12F20-2B	12F24-2B	12F28-2B	12F32-2B
GRAVITY	SAFE LOAD (LBS/FT)	456	878	1073	1513	2020	2617	3333	4206 (39)
	MOMENT (FT-LB)	7763	18052 (15)	25416 (16)	36753 (16)	48208 (17)	59740 (17)	71328 (17)	82952 (47)
	SHEAR (LBS)	3211	4526	5172	6793	8396	10005	11631	13277

	U-LINTEL TYPE	12U8	12F8-2T	12F12-2T	12F16-2T	12F20-2T	12F24-2T	12F28-2T	8F32-2T
UPLIFT	SAFE LOAD (LBS/FT)	NR	814 (27)	753 (13)	1269 (27)	1788 (33)	2201 (33)	2616 (33)	3032 (33)
	MOMENT (FT-LB)	NR	13935 (27)	12805 (13)	21584 (27)	30418 (33)	37444 (33)	44502 (33)	51585 (33)
	SHEAR (LBS)	NR	4748	7375	9670	11964	14258	16553	18847

	U-LINTEL TYPE	12U8	12F8	RCMU
LATERAL	SAFE LOAD (LBS/FT)	260	971	345 (27)
	MOMENT (FT-LB)	11652	24086 (16)	5868 (27)
	SHEAR (LBS)	1295	4841	3135

11'-5" to 12'-0" HIGH STRENGTH LINTEL GRAVITY LOAD / DEFLECTION GRAPH

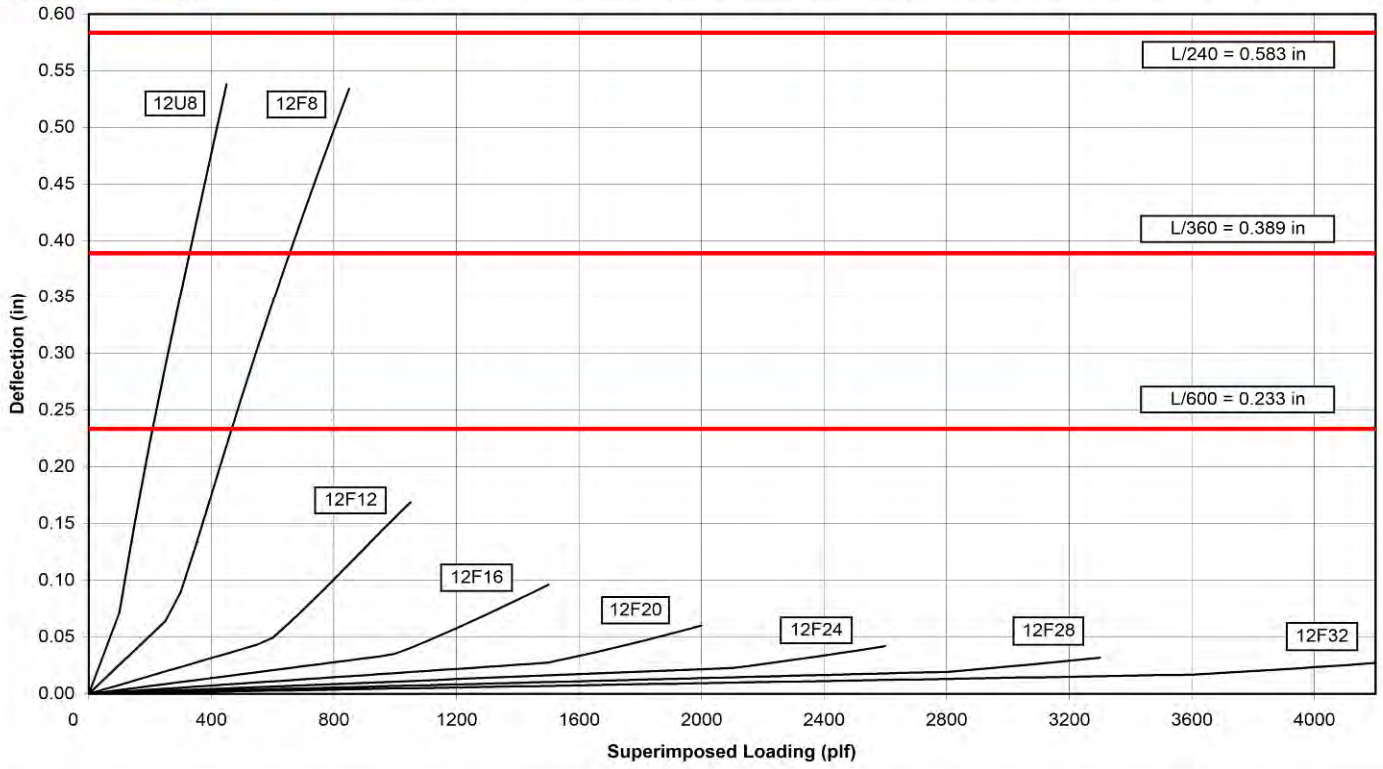

© 2015 Cast-Crete USA, Inc.

12 INCH U-LINTEL LENGTHS 12'-1" TO 13'-4"

DATA SHEET

	U-LINTEL TYPE	12U8	12F8-2B	12F12-2B	12F16-2B	12F20-2B	12F24-2B	12F28-2B	12F32-2B
GRAVITY	SAFE LOAD (LBS/FT)	359	767 (8)	926	1294	1709	2188	2743	3409 (42)
	MOMENT (FT-LB)	7591	17674 (15)	24849 (16)	35997 (17)	47262 (17)	58606 (17)	70004 (17)	81439 (48)
	SHEAR (LBS)	3183	4464	5080	6670	8243	9821	11417	13031

	U-LINTEL TYPE	12U8	12F8-2T	12F12-2T	12F16-2T	12F20-2T	12F24-2T	12F28-2T	8F32-2T
UPLIFT	SAFE LOAD (LBS/FT)	NR	678 (27)	633 (12)	1057 (26)	1485 (32)	1826 (32)	2169 (32)	2513 (32)
	MOMENT (FT-LB)	NR	14314 (27)	13373 (12)	22340 (26)	31364 (32)	38579 (32)	45826 (32)	53098 (32)
	SHEAR (LBS)	NR	4809	7467	9792	12117	14442	16767	19092

	U-LINTEL TYPE	12U8	12F8	RCMU
LATERAL	SAFE LOAD (LBS/FT)	229	857	278 (27)
	MOMENT (FT-LB)	11652	24086 (16)	5868 (27)
	SHEAR (LBS)	1295	4841	3135

12'-1" to 13'-4" HIGH STRENGTH LINTEL GRAVITY LOAD / DEFLECTION GRAPH

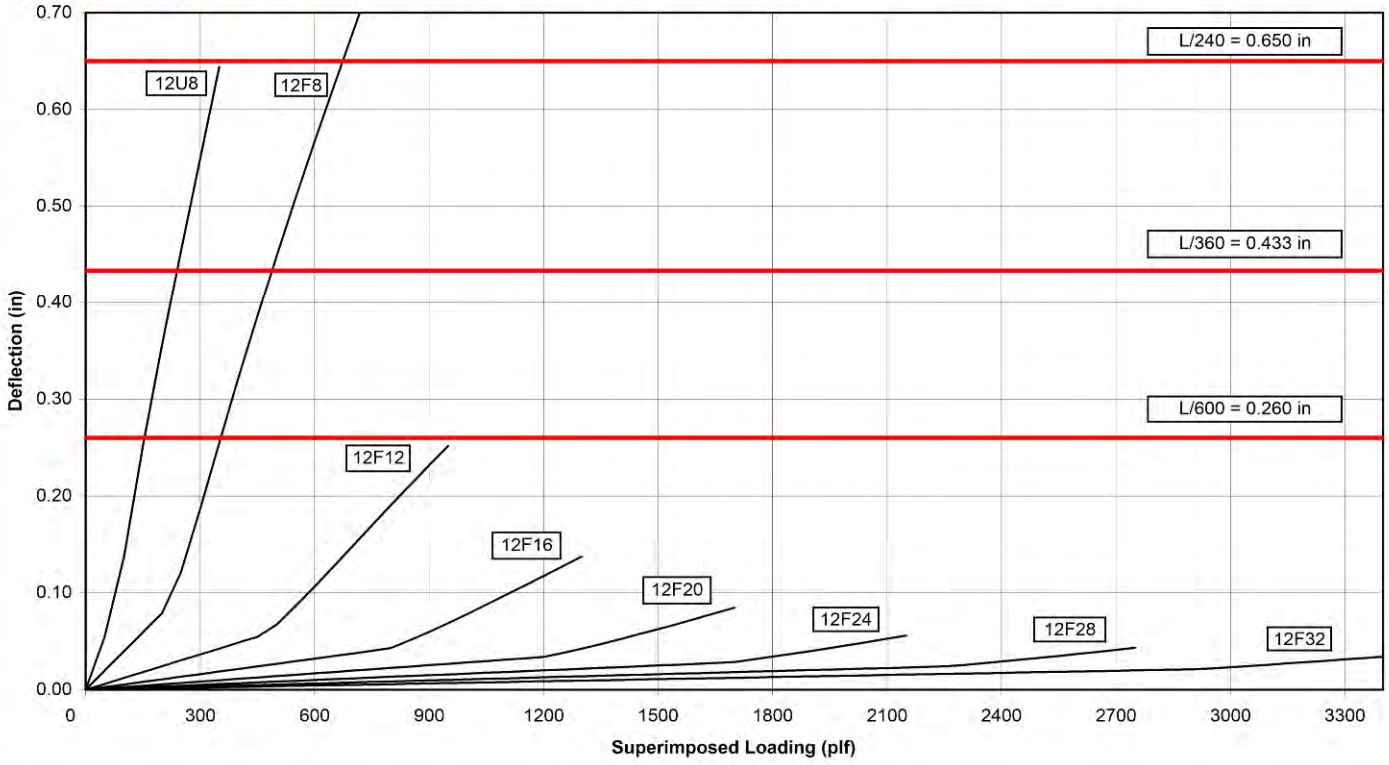

© 2015 Cast-Crete USA, Inc.

12 INCH U-LINTEL LENGTHS 13'-5" TO 14'-0"

DATA SHEET

	U-LINTEL TYPE	12U8	12F8-2B	12F12-2B	12F16-2B	12F20-2B	12F24-2B	12F28-2B	12F32-2B
GRAVITY	SAFE LOAD (LBS/FT)	321	720 (12)	865	1204	1584	2017	2451	3106 (43)
	MOMENT (FT-LB)	7497	17469 (15)	24542 (16)	35588 (17)	46751 (17)	57992 (17)	69288 (17)	80621 (49)
	SHEAR (LBS)	3169	4434	5034	6609	8166	9729	11309	12909

	U-LINTEL TYPE	12U8	12F8-2T	12F12-2T	12F16-2T	12F20-2T	12F24-2T	12F28-2T	8F32-2T
UPLIFT	SAFE LOAD (LBS/FT)	NR	622 (27)	586 (12)	974 (25)	1365 (31)	1679 (31)	1993 (31)	2309 (32)
	MOMENT (FT-LB)	NR	14518 (26)	13679 (12)	22749 (25)	31875 (31)	39192 (31)	46542 (31)	53915 (32)
	SHEAR (LBS)	NR	4840	7513	9854	12194	14534	16875	19215

	U-LINTEL TYPE	12U8	12F8	RCMU
LATERAL	SAFE LOAD (LBS/FT)	216	809	251 (27)
	MOMENT (FT-LB)	11652	24086 (16)	5868 (27)
	SHEAR (LBS)	1295	4841	3135

13'-5" to 14'-0" HIGH STRENGTH LINTEL GRAVITY LOAD / DEFLECTION GRAPH

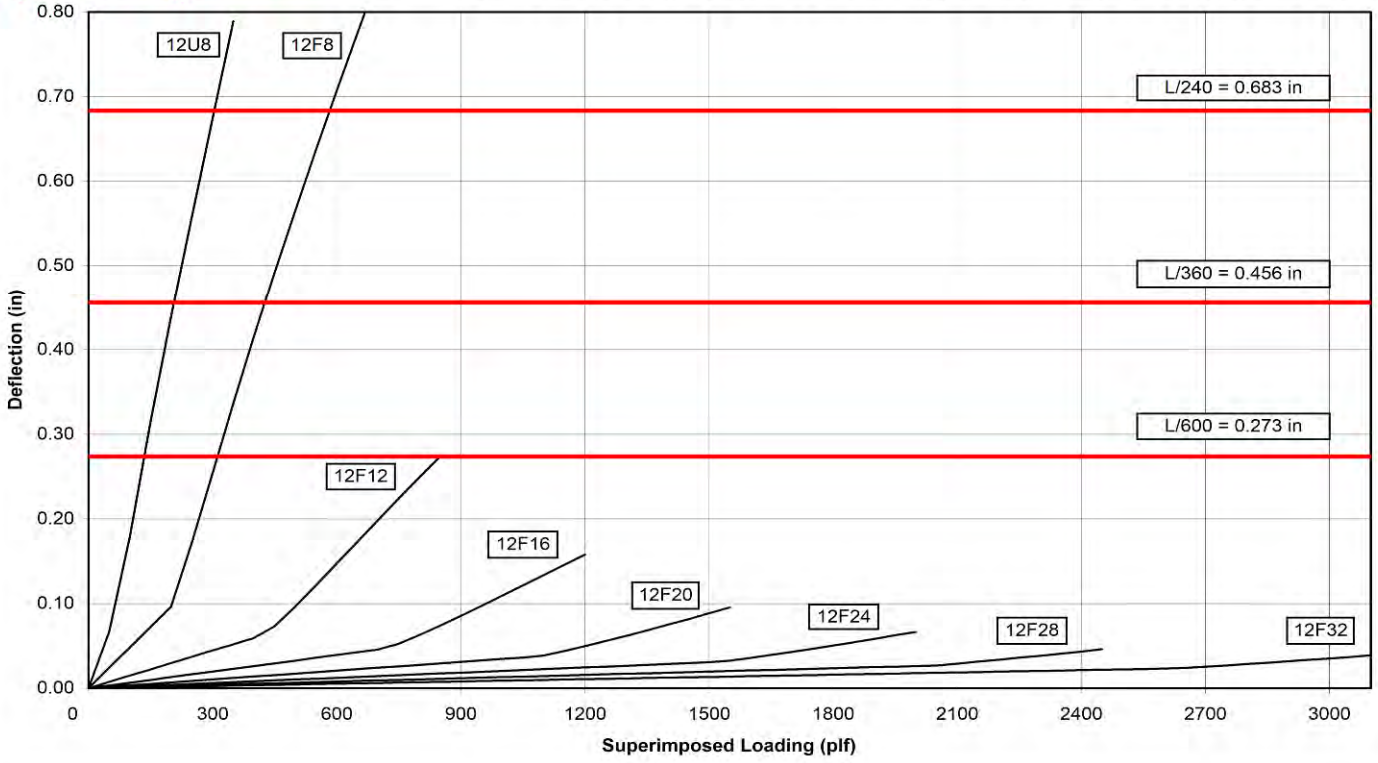

© 2015 Cast-Crete USA, Inc.

12 INCH U-LINTEL LENGTHS 14'-1" TO 17'-4"

DATA SHEET

	U-LINTEL TYPE	12U8	12F8-2B	12F12-2B	12F16-2B	12F20-2B	12F24-2B	12F28-2B	12F32-2B
GRAVITY	SAFE LOAD (LBS/FT)	NR	451 (17)	631 (18)	881 (15)	1141 (14)	1428 (14)	1750 (16)	2102 (52)
	MOMENT (FT-LB)	NR	16294 (16)	22779 (18)	33237 (18)	43812 (18)	54466 (18)	65174 (19)	75919 (52)
	SHEAR (LBS)	NR	4280	4804	6302	7783	9269	10773	12295

	U-LINTEL TYPE	12U8	12F8-2T	12F12-2T	12F16-2T	12F20-2T	12F24-2T	12F28-2T	8F32-2T
UPLIFT	SAFE LOAD (LBS/FT)	NR	434 (25)	427 (10)	695 (23)	964 (29)	1182 (29)	1402 (29)	1623 (29)
	MOMENT (FT-LB)	NR	15694 (24)	15443 (10)	25100 (23)	34814 (29)	42719 (29)	50656 (29)	58618 (29)
	SHEAR (LBS)	NR	4993	7743	10160	12577	14994	17411	19828

	U-LINTEL TYPE	12U8	12F8	RCMU
LATERAL	SAFE LOAD (LBS/FT)	NR	633 (12)	162 (27)
	MOMENT (FT-LB)	NR	24086 (16)	5868 (27)
	SHEAR (LBS)	NR	4841	3135

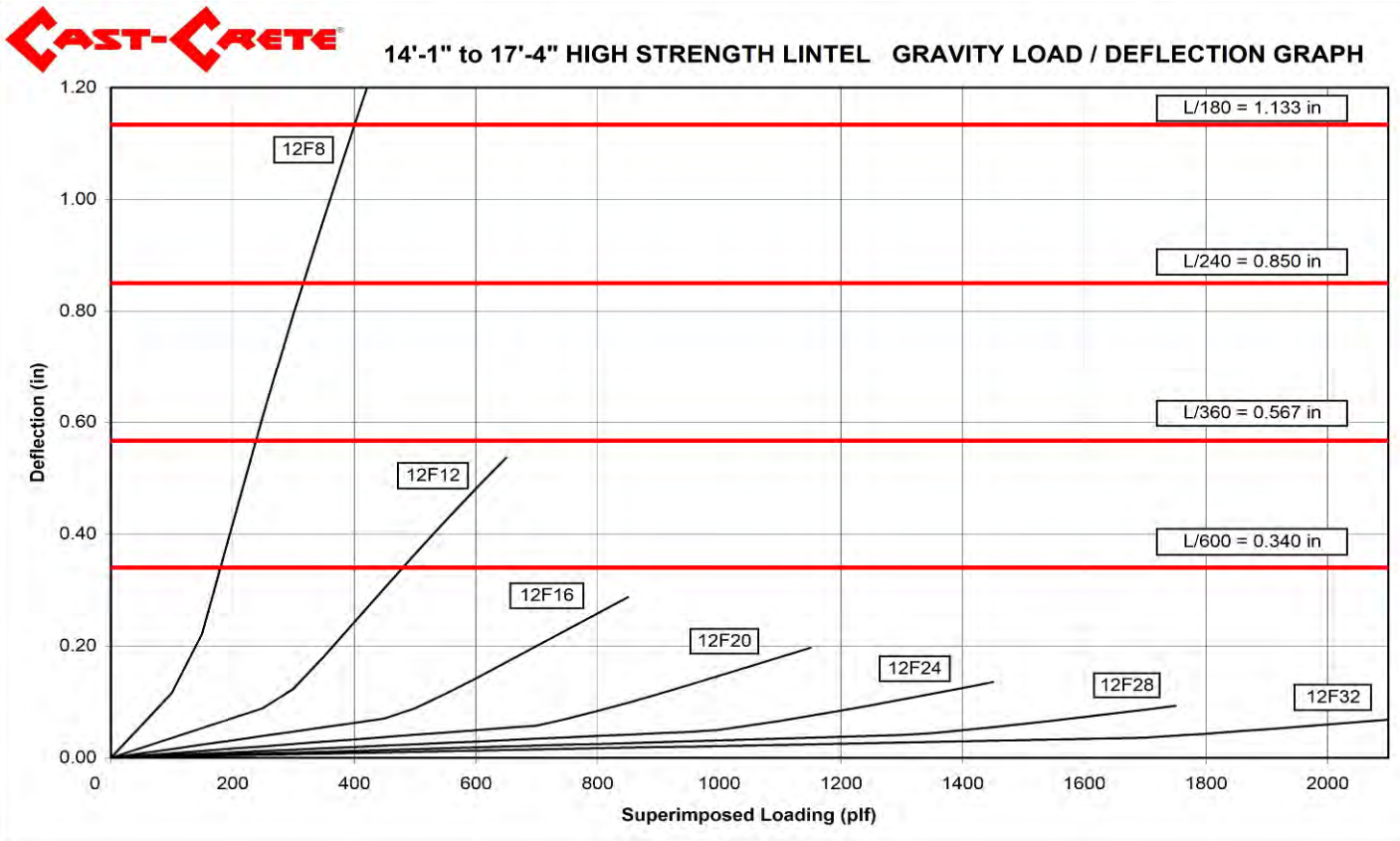

© 2015 Cast-Crete USA, Inc.

12 INCH U-LINTEL LENGTHS 17'-5" TO 19'-4"

DATA SHEET

	U-LINTEL TYPE	12U8	12F8-2B	12F12-2B	12F16-2B	12F20-2B	12F24-2B	12F28-2B	12F32-2B
GRAVITY	SAFE LOAD (LBS/FT)	NR	343 (17)	477 (19)	700 (19)	925 (20)	1152 (20)	1380 (20)	1609 (54)
	MOMENT (FT-LB)	NR	15466 (17)	21537 (19)	31581 (19)	41742 (19)	51982 (19)	62276 (19)	72607 (54)
	SHEAR (LBS)	NR	4188	4666	6118	7553	8993	10451	11927

	U-LINTEL TYPE	12U8	12F8-2T	12F12-2T	12F16-2T	12F20-2T	12F24-2T	12F28-2T	8F32-2T
UPLIFT	SAFE LOAD (LBS/FT)	NR	366 (23)	370 (10)	593 (22)	817 (27)	1002 (27)	1187 (27)	1372 (27)
	MOMENT (FT-LB)	NR	16522 (23)	16685 (10)	26756 (22)	36884 (27)	45203 (27)	53554 (27)	61930 (27)
	SHEAR (LBS)	NR	5085	7881	10344	12807	15270	17733	20196

	U-LINTEL TYPE	12U8	12F8	RCMU
LATERAL	SAFE LOAD (LBS/FT)	NR	534 (17)	130 (27)
	MOMENT (FT-LB)	NR	24086 (16)	5868 (27)
	SHEAR (LBS)	NR	4841	3135

17'-5" to 19'-4" HIGH STRENGTH LINTEL GRAVITY LOAD / DEFLECTION GRAPH

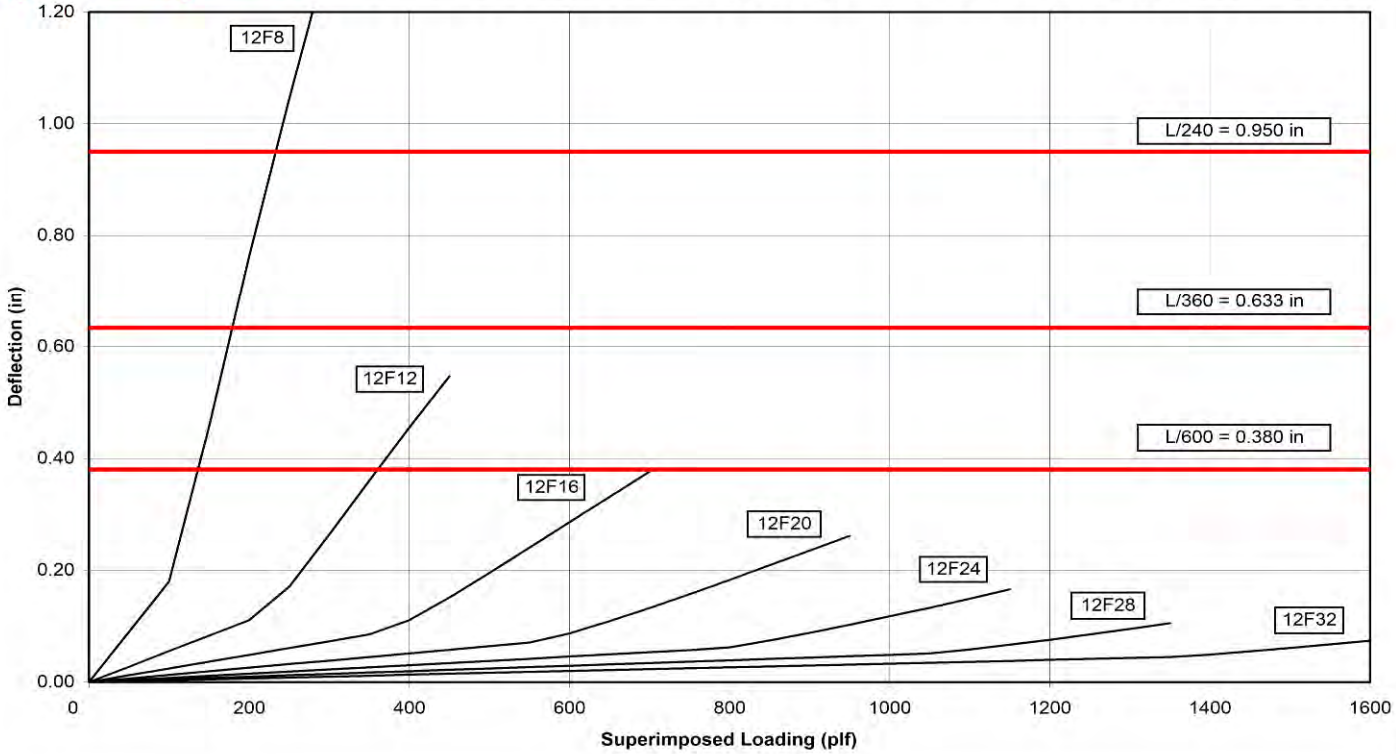

© 2015 Cast-Crete USA, Inc.

12 INCH RECESS U-LINTEL LENGTHS 3'-8" TO 4'-4"

DATA SHEET

GRAVITY	U-LINTEL TYPE	12RU6	12RF6-2B	12RF10-2B	12RF14-2B	12RF18-2B	12RF22-2B	12RF26-2B	12RF30-2B
	SAFE LOAD (LBS/FT)	2538	2942	5468	7584	9640	11669	13679	15679
	MOMENT (FT-LB)	4265	11858 (12)	17397 (14)	27256 (15)	37249 (15)	47322 (16)	57446 (16)	67606 (44)
	SHEAR (LBS)	3027	3402	5373	7504	9607	11669	13679	15679

UPLIFT	U-LINTEL TYPE	12RU6	12RF6-2T	12RF10-2T	12RF14-2T	12RF18-2T	12RF22-2T	12RF26-2T	12RF30-2T
	SAFE LOAD (LBS/FT)	NR	1626	2685	3746	4806	5867	6928	7989
	MOMENT (FT-LB)	NR	6068 (30)	7360 (2)	14573 (24)	23476 (36)	30142 (37)	36499 (37)	42883 (37)
	SHEAR (LBS)	NR	2981	5370	7492	9614	11736	13858	15980

LATERAL	U-LINTEL TYPE	12RU6	12RF6	RCMU
	SAFE LOAD (LBS/FT)	1295	3692	2583 (17)
	MOMENT (FT-LB)	8600	20907 (18)	5868 (27)
	SHEAR (LBS)	1295	3692	3135

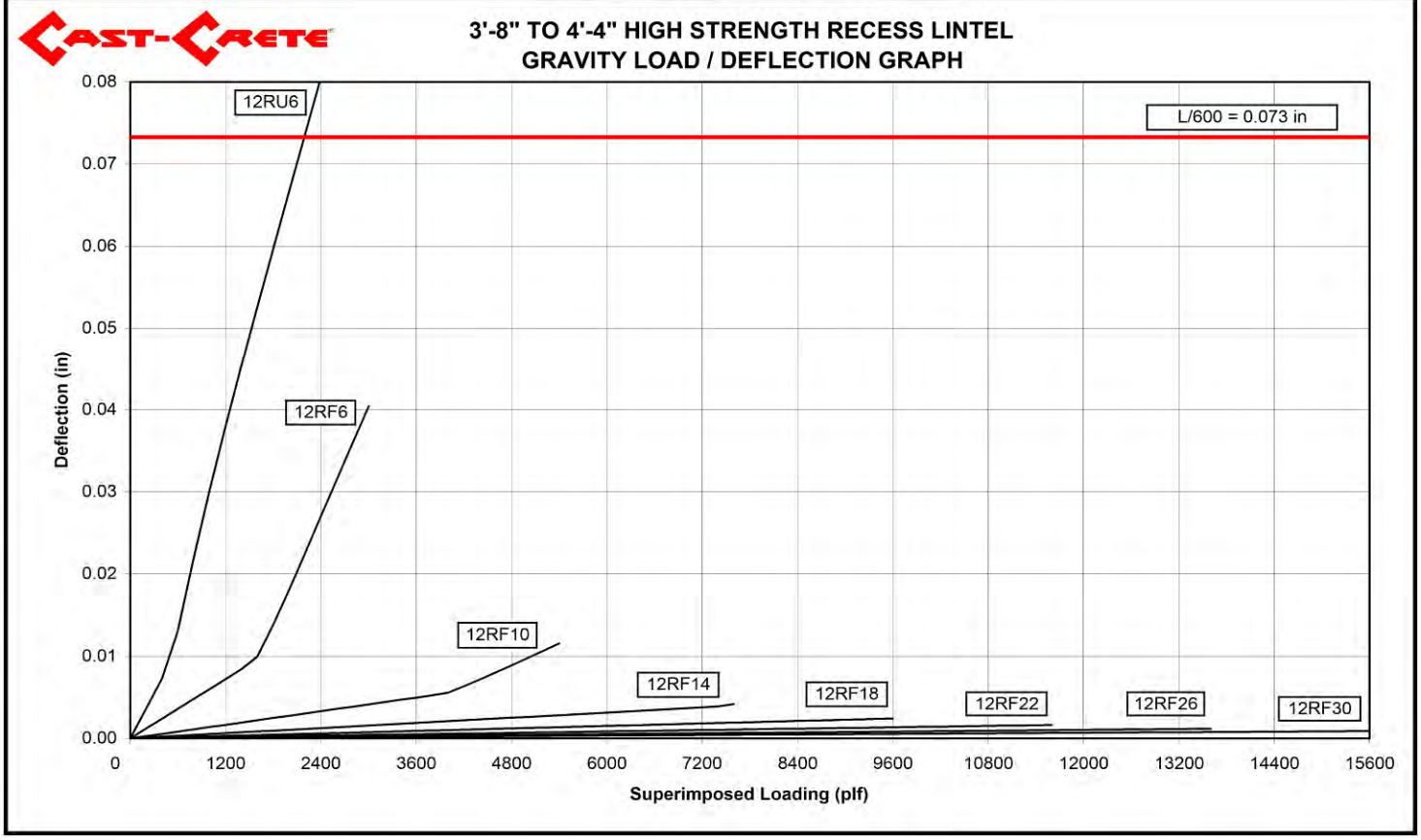

© 2015 Cast-Crete USA, Inc.

12 INCH RECESS U-LINTEL LENGTHS 4'-5" TO 4'-6"

DATA SHEET

GRAVITY	U-LINTEL TYPE	12RU6	12RF6-2B	12RF10-2B	12RF14-2B	12RF18-2B	12RF22-2B	12RF26-2B	12RF30-2B
	SAFE LOAD (LBS/FT)	2319	2740	5468	7584	9640	11669	13679	15679
	MOMENT (FT-LB)	4259	11847 (12)	17379 (14)	27231 (15)	37216 (15)	47281 (16)	57398 (16)	67550 (44)
	SHEAR (LBS)	3024	3397	5363	7490	9589	11669	13679	15679

UPLIFT	U-LINTEL TYPE	12RU6	12RF6-2T	12RF10-2T	12RF14-2T	12RF18-2T	12RF22-2T	12RF26-2T	12RF30-2T
	SAFE LOAD (LBS/FT)	NR	1558	2582	3602	4623	5643	6664	7684
	MOMENT (FT-LB)	NR	6079 (30)	7380 (2)	14601 (24)	23512 (36)	30187 (37)	36551 (37)	42943 (37)
	SHEAR (LBS)	NR	2986	5379	7505	9631	11757	13883	16009

LATERAL	U-LINTEL TYPE	12RU6	12RF6	RCMU
	SAFE LOAD (LBS/FT)	1213	3458	2417 (18)
	MOMENT (FT-LB)	8600	20907 (18)	5868 (27)
	SHEAR (LBS)	1295	3692	3135

4'-5" TO 4'-6" HIGH STRENGTH RECESS LINTEL GRAVITY LOAD / DEFLECTION GRAPH

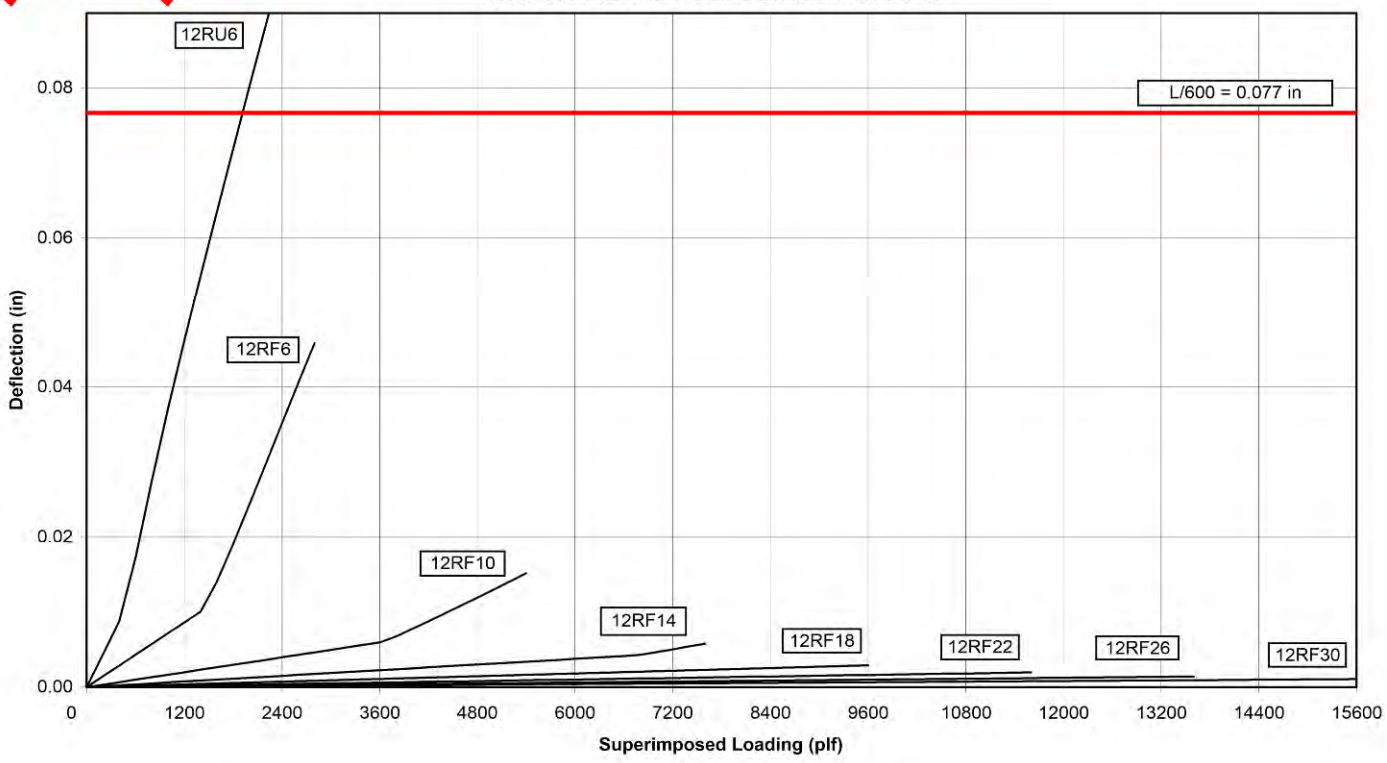

© 2015 Cast-Crete USA, Inc.

12 INCH RECESS U-LINTEL LENGTHS 4'-7" TO 5'-8"

DATA SHEET

GRAVITY	U-LINTEL TYPE	12RU6	12RF6-2B	12RF10-2B	12RF14-2B	12RF18-2B	12RF22-2B	12RF26-2B	12RF30-2B
	SAFE LOAD (LBS/FT)	1347	1841	3555	6395	9640	11669	13679	15679 (24)
	MOMENT (FT-LB)	4209	11760 (12)	17230 (14)	27020 (15)	36943 (15)	46947 (16)	57002 (16)	67092 (45)
	SHEAR (LBS)	3001	3357	5295	7394	9466	11542	13631	15679

UPLIFT	U-LINTEL TYPE	12RU6	12RF6-2T	12RF10-2T	12RF14-2T	12RF18-2T	12RF22-2T	12RF26-2T	12RF30-2T
	SAFE LOAD (LBS/FT)	NR	1210	2042	2850	3658	4466	5273	6081
	MOMENT (FT-LB)	NR	6167 (30)	7541 (2)	14828 (23)	23805 (35)	30547 (36)	36978 (36)	43437 (36)
	SHEAR (LBS)	NR	3026	5447	7601	9755	11909	14063	16217

LATERAL	U-LINTEL TYPE	12RU6	12RF6	RCMU
	SAFE LOAD (LBS/FT)	784	2236	1650 (27)
	MOMENT (FT-LB)	8600	20907 (18)	5868 (27)
	SHEAR (LBS)	1295	3692	3135

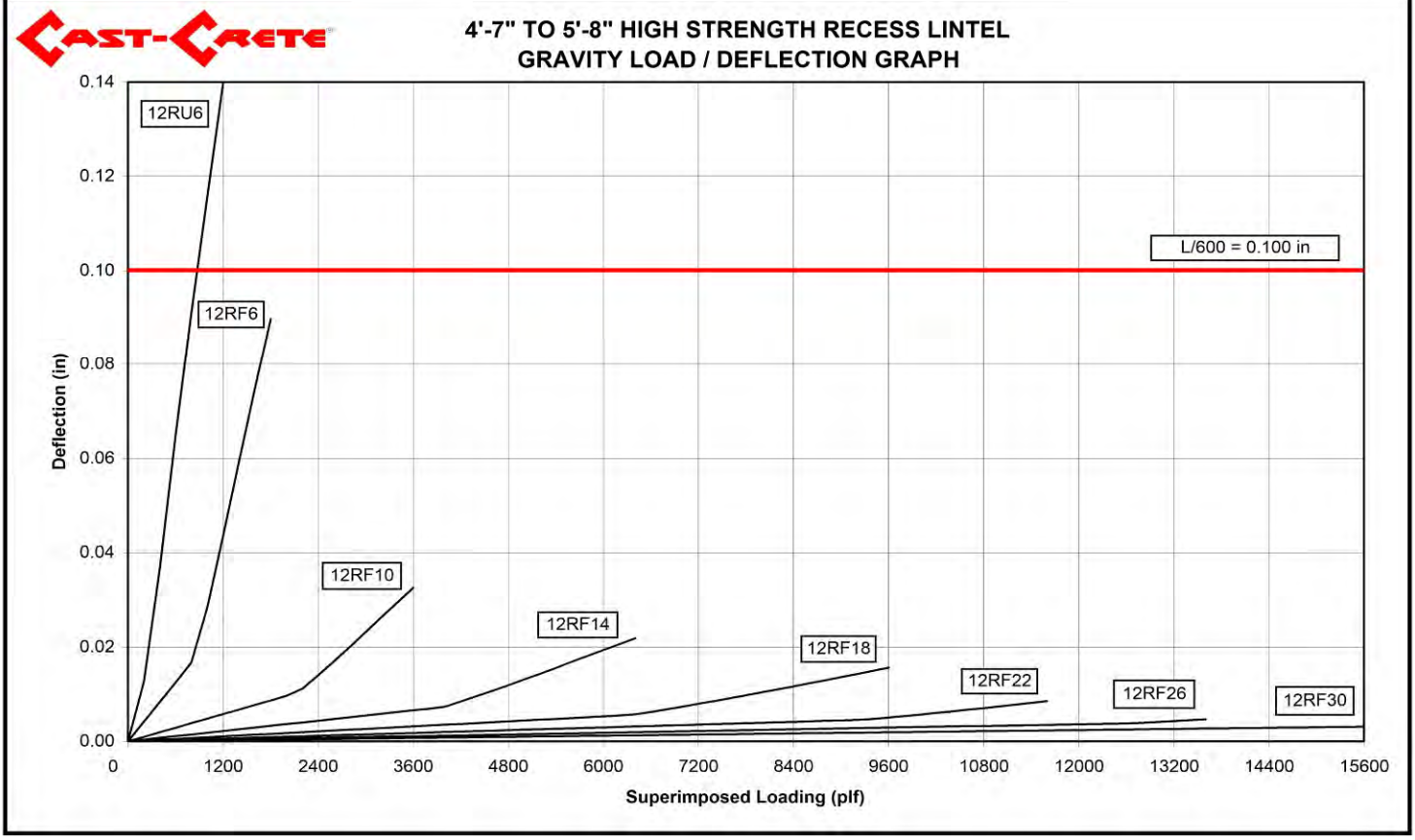

© 2015 Cast-Crete USA, Inc.

12 INCH RECESS U-LINTEL LENGTHS 5'-9" TO 5'-10"

DATA SHEET

	U-LINTEL TYPE	12RU6	12RF6-2B	12RF10-2B	12RF14-2B	12RF18-2B	12RF22-2B	12RF26-2B	12RF30-2B
GRAVITY	SAFE LOAD (LBS/FT)	1259	1758	3361	5954	9640	11669	13679	15679 (29)
	MOMENT (FT-LB)	4201	11745 (12)	17205 (14)	26985 (15)	36898 (15)	46891 (16)	56936 (16)	67016 (45)
	SHEAR (LBS)	2998	3351	5286	7381	9448	11520	13605	15679

	U-LINTEL TYPE	12RU6	12RF6-2T	12RF10-2T	12RF14-2T	12RF18-2T	12RF22-2T	12RF26-2T	12RF30-2T
UPLIFT	SAFE LOAD (LBS/FT)	NR	1173	1984 (1)	2769	3553	4338	5123	5908
	MOMENT (FT-LB)	NR	6181 (30)	7567 (2)	14865 (23)	23853 (35)	30605 (36)	37047 (36)	43517 (36)
	SHEAR (LBS)	NR	3032	5457	7615	9773	11931	14089	16247

	U-LINTEL TYPE	12RU6	12RF6	RCMU
LATERAL	SAFE LOAD (LBS/FT)	747	2129	1552 (27)
	MOMENT (FT-LB)	8600	20907 (18)	5868 (27)
	SHEAR (LBS)	1295	3692	3135

5'-9" TO 5'-10" HIGH STRENGTH RECESS LINTEL GRAVITY LOAD / DEFLECTION GRAPH

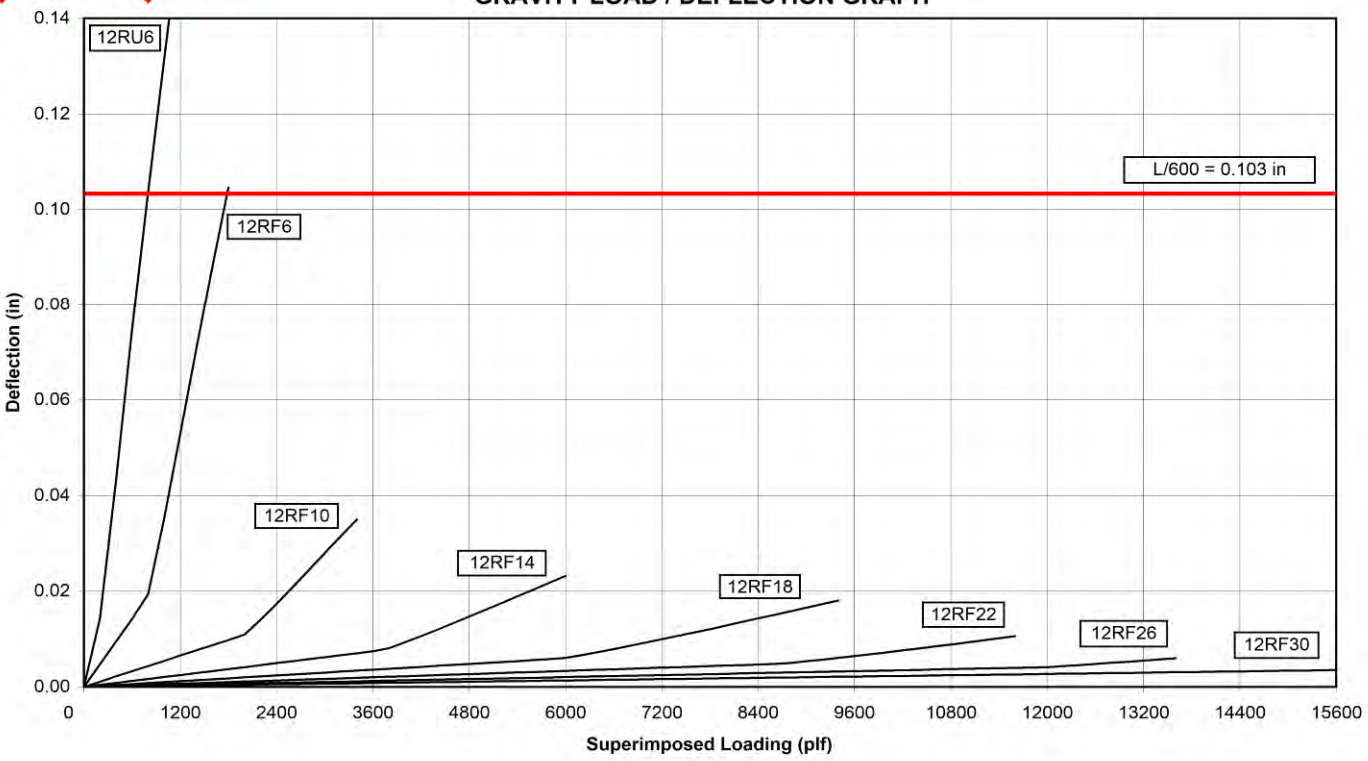

© 2015 Cast-Crete USA, Inc.

12 INCH RECESS U-LINTEL LENGTHS 5'-11" TO 6'-8"

DATA SHEET

GRAVITY	U-LINTEL TYPE	12RU6	12RF6-2B	12RF10-2B	12RF14-2B	12RF18-2B	12RF22-2B	12RF26-2B	12RF30-2B
	SAFE LOAD (LBS/FT)	924	1430	2633	4415	7075	10353 (16)	12573 (16)	14800 (45)
	MOMENT (FT-LB)	4156	11666 (12)	17070 (14)	26794 (15)	36651 (15)	46589 (16)	56578 (16)	66602 (45)
	SHEAR (LBS)	2981	3323	5237	7312	9360	11412	13477	15564

UPLIFT	U-LINTEL TYPE	12RU6	12RF6-2T	12RF10-2T	12RF14-2T	12RF18-2T	12RF22-2T	12RF26-2T	12RF30-2T
	SAFE LOAD (LBS/FT)	NR	1020 (4)	1538 (2)	2426 (5)	3114	3802	4489	5177
	MOMENT (FT-LB)	NR	6260 (29)	7710 (2)	15067 (23)	24115 (35)	30926 (36)	37427 (36)	43956 (36)
	SHEAR (LBS)	NR	3060	5505	7683	9861	12039	14217	16395

LATERAL	U-LINTEL TYPE	12RU6	12RF6	RCMU
	SAFE LOAD (LBS/FT)	602	1716	1170 (27)
	MOMENT (FT-LB)	8600	20907 (18)	5868 (27)
	SHEAR (LBS)	1295	3692	3135

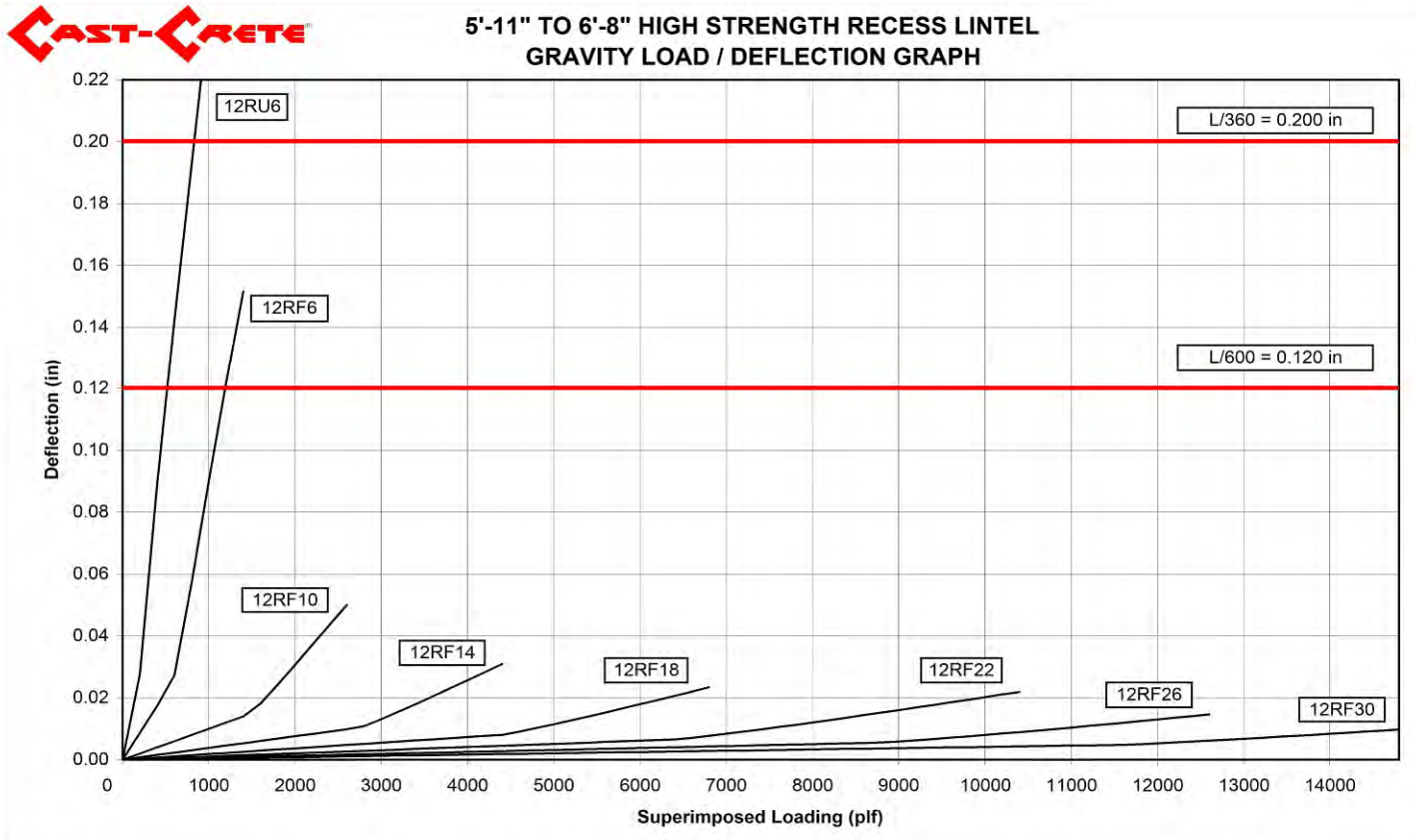

© 2015 Cast-Crete USA, Inc.

12 INCH RECESS U-LINTEL LENGTHS 6'-9" TO 7'-6"

DATA SHEET

GRAVITY	U-LINTEL TYPE	12RU6	12RF6-2B	12RF10-2B	12RF14-2B	12RF18-2B	12RF22-2B	12RF26-2B	12RF30-2B
	SAFE LOAD (LBS/FT)	703	1203	2157	3494	5329	7922 (16)	9623 (17)	11329 (46)
	MOMENT (FT-LB)	4103	11575 (12)	16915 (14)	26575 (15)	36368 (16)	46241 (16)	56166 (16)	66126 (45)
	SHEAR (LBS)	2965	3295	5189	7244	9271	11303	13349	15416

UPLIFT	U-LINTEL TYPE	12RU6	12RF6-2T	12RF10-2T	12RF14-2T	12RF18-2T	12RF22-2T	12RF26-2T	12RF30-2T
	SAFE LOAD (LBS/FT)	NR	904 (15)	1226 (2)	2163 (15)	2776 (10)	3390 (7)	4003 (5)	4617 (3)
	MOMENT (FT-LB)	NR	6351 (29)	7873 (2)	15298 (23)	24413 (35)	31292 (35)	37860 (36)	44457 (36)
	SHEAR (LBS)	NR	3088	5553	7751	9949	12147	14345	16543

LATERAL	U-LINTEL TYPE	12RU6	12RF6	RCMU
	SAFE LOAD (LBS/FT)	504	1438	914 (27)
	MOMENT (FT-LB)	8600	20907 (18)	5868 (27)
	SHEAR (LBS)	1295	3692	3135

6'-9" TO 7'-6" HIGH STRENGTH RECESS LINTEL
GRAVITY LOAD / DEFLECTION GRAPH

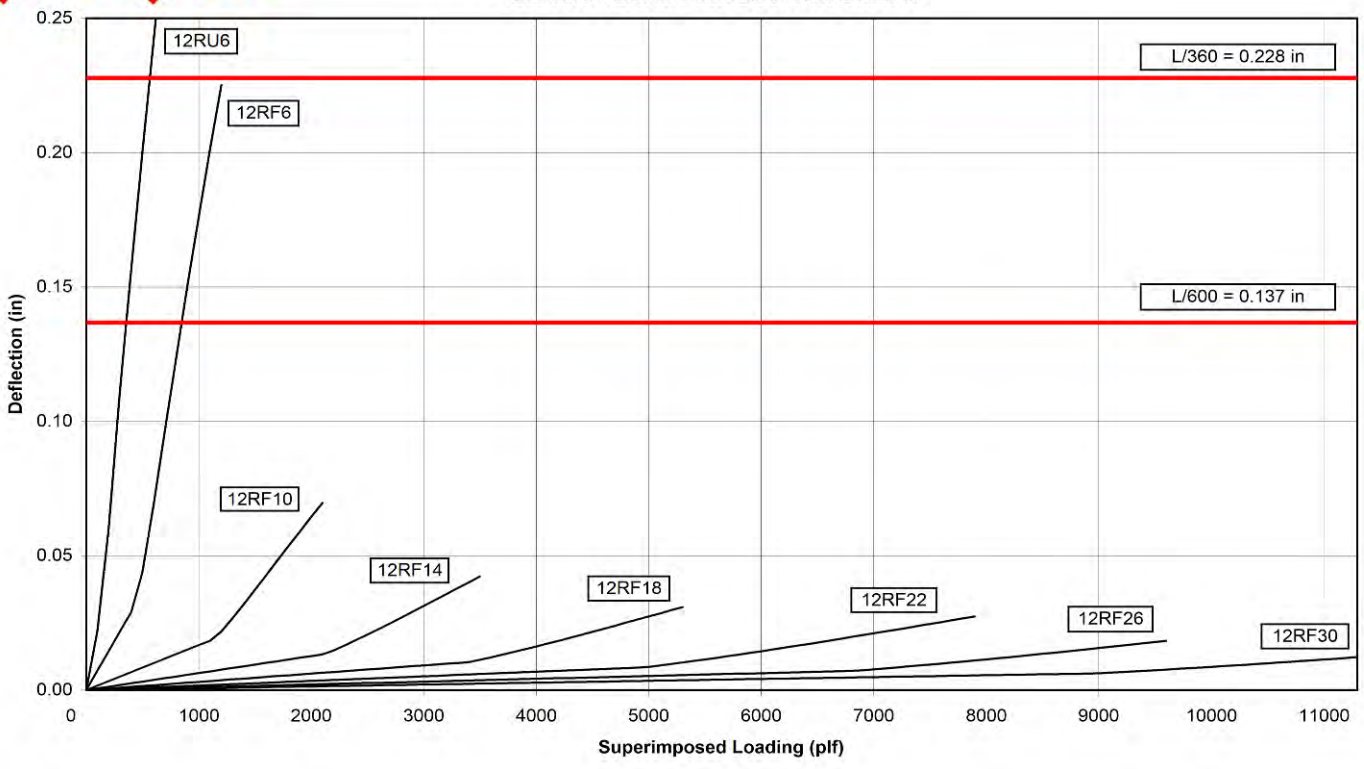

© 2015 Cast-Crete USA, Inc.

12 INCH RECESS U-LINTEL LENGTHS 7'-7" TO 9'-8"

DATA SHEET

	U-LINTEL TYPE	12RU6	12RF6-2B	12RF10-2B	12RF14-2B	12RF18-2B	12RF22-2B	12RF26-2B	12RF30-2B
GRAVITY	SAFE LOAD (LBS/FT)	389	843	1451 (5)	2239	3203 (9)	4427 (16)	5417 (17)	6380 (47)
	MOMENT (FT-LB)	3936	11284 (12)	16418 (15)	25872 (16)	35459 (16)	45127 (16)	54846 (16)	64600 (46)
	SHEAR (LBS)	2923	3221	5063	7066	9042	11022	13015	15030

	U-LINTEL TYPE	12RU6	12RF6-2T	12RF10-2T	12RF14-2T	12RF18-2T	12RF22-2T	12RF26-2T	12RF30-2T
UPLIFT	SAFE LOAD (LBS/FT)	NR	703 (14)	771 (2)	1472 (22)	2181 (29)	2663 (26)	3145 (25)	3628 (23)
	MOMENT (FT-LB)	NR	8421 (43)	8392 (2)	16031 (22)	25360 (33)	32453 (34)	39236 (34)	46047 (34)
	SHEAR (LBS)	NR	3162	5679	7929	10179	12429	14679	16929

	U-LINTEL TYPE	12RU6	12RF6	RCMU
LATERAL	SAFE LOAD (LBS/FT)	355	1011	539 (27)
	MOMENT (FT-LB)	11516	23231 (16)	5868 (27)
	SHEAR (LBS)	1295	3692	3135

7'-7" TO 9'-8" HIGH STRENGTH RECESS LINTEL
GRAVITY LOAD / DEFLECTION GRAPH

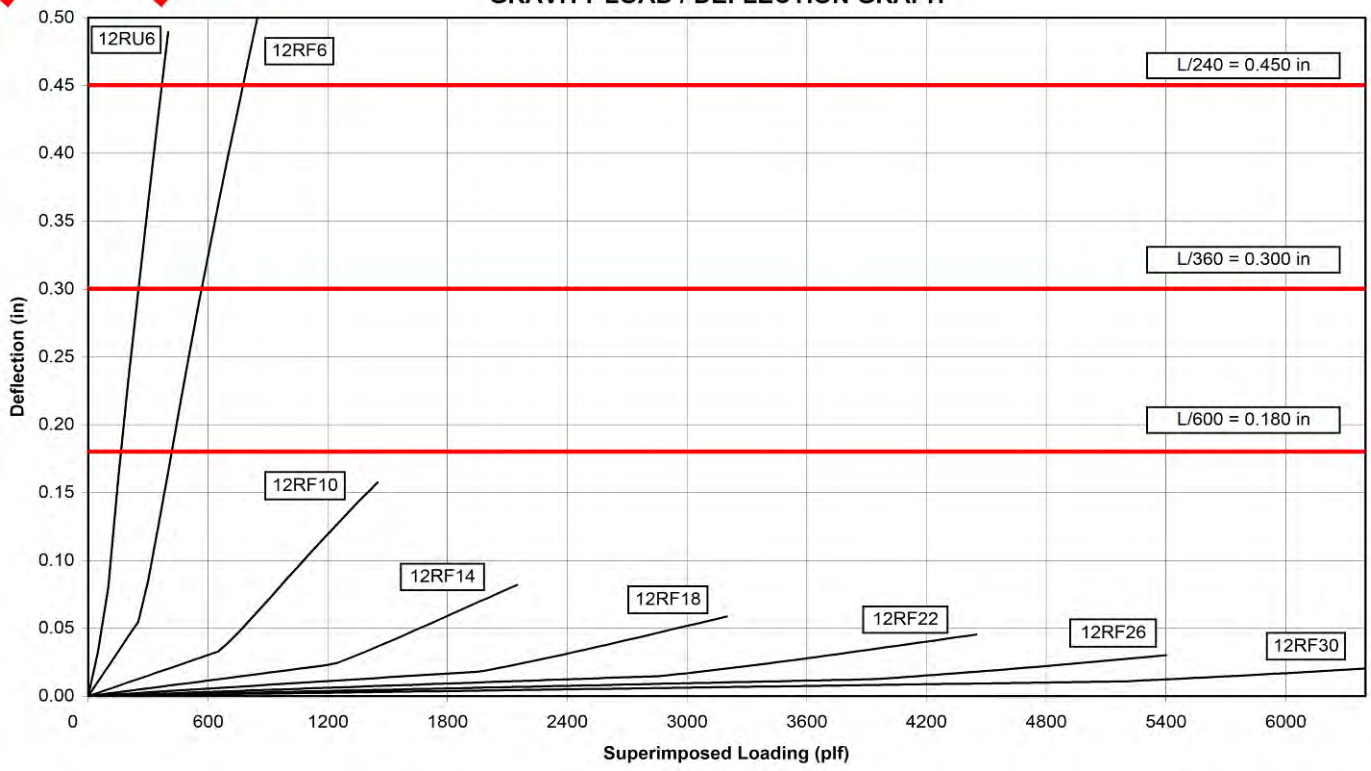

© 2015 Cast-Crete USA, Inc.

6 INCH U-LINTEL LENGTHS 2'-8" TO 3'-6"

DATA SHEET

	U-LINTEL TYPE	6U8	6F8-1B	6F12-1B	6F16-1B	6F20-1B	6F24-1B	6F28-1B	6F32-1B
GRAVITY	SAFE LOAD (LBS/FT)	2332	2676	3892	5050	6148	7227	8297	9357
	MOMENT (FT-LB)	4108	8243 (15)	14651 (17)	21146 (18)	27673 (18)	34235 (18)	40823 (46)	31545 (19)
	SHEAR (LBS)	2306	2637	3856	5031	6148	7227	8297	9357

	U-LINTEL TYPE	6U8	6F8-1T	6F12-1T	6F16-1T	6F20-1T	6F24-1T	6F28-1T	6F32-1T
UPLIFT	SAFE LOAD (LBS/FT)	NR	1412	2074	2715	3356	3997	4638	5279
	MOMENT (FT-LB)	NR	4783 (31)	5197 (13)	9142 (30)	13370 (37)	16517 (37)	19679 (37)	22854 (37)
	SHEAR (LBS)	NR	2235	3284	4299	5314	6329	7345	8360

	U-LINTEL TYPE	6U8	6F8		RCMU
LATERAL	SAFE LOAD (LBS/FT)	587	1055		596
	MOMENT (FT-LB)	1327	1322		748
	SHEAR (LBS)	715	2209		935

2'-8" to 3'-6" HIGH STRENGTH LINTEL GRAVITY LOAD / DEFLECTION GRAPH

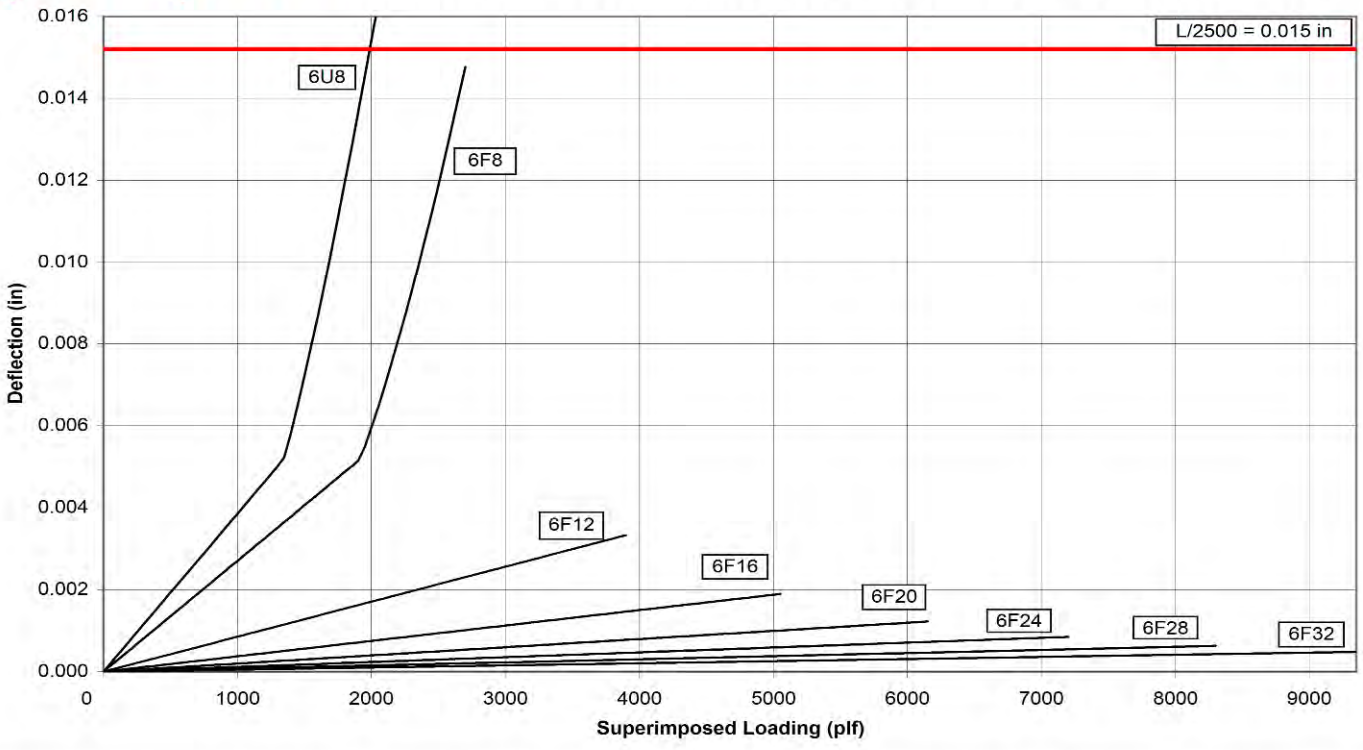

© 2015 Cast-Crete USA, Inc.

6 INCH U-LINTEL LENGTHS 3'-7" TO 4'-0"

DATA SHEET

	U-LINTEL TYPE	6U8	6F8-1B	6F12-1B	6F16-1B	6F20-1B	6F24-1B	6F28-1B	6F32-1B
GRAVITY	SAFE LOAD (LBS/FT)	2025	2313	3892	5050	6148	7227	8297	9357
	MOMENT (FT-LB)	4095	8224 (15)	14623 (17)	21108 (18)	27626 (18)	34178 (18)	40757 (46)	31470 (19)
	SHEAR (LBS)	2299	2626	3839	5009	6133	7227	8297	9357

	U-LINTEL TYPE	6U8	6F8-1T	6F12-1T	6F16-1T	6F20-1T	6F24-1T	6F28-1T	6F32-1T
UPLIFT	SAFE LOAD (LBS/FT)	NR	1225	1800	2357	2913	3470	4027	4583
	MOMENT (FT-LB)	NR	4802 (31)	5225 (13)	9180 (29)	13417 (37)	16573 (37)	19745 (37)	22929 (37)
	SHEAR (LBS)	NR	2246	3300	4321	5342	6362	7383	8404

	U-LINTEL TYPE	6U8	6F8		RCMU
LATERAL	SAFE LOAD (LBS/FT)	487	787		445
	MOMENT (FT-LB)	1327	1322		748
	SHEAR (LBS)	715	2209		935

3'-7" to 4'-0" HIGH STRENGTH LINTEL GRAVITY LOAD / DEFLECTION GRAPH

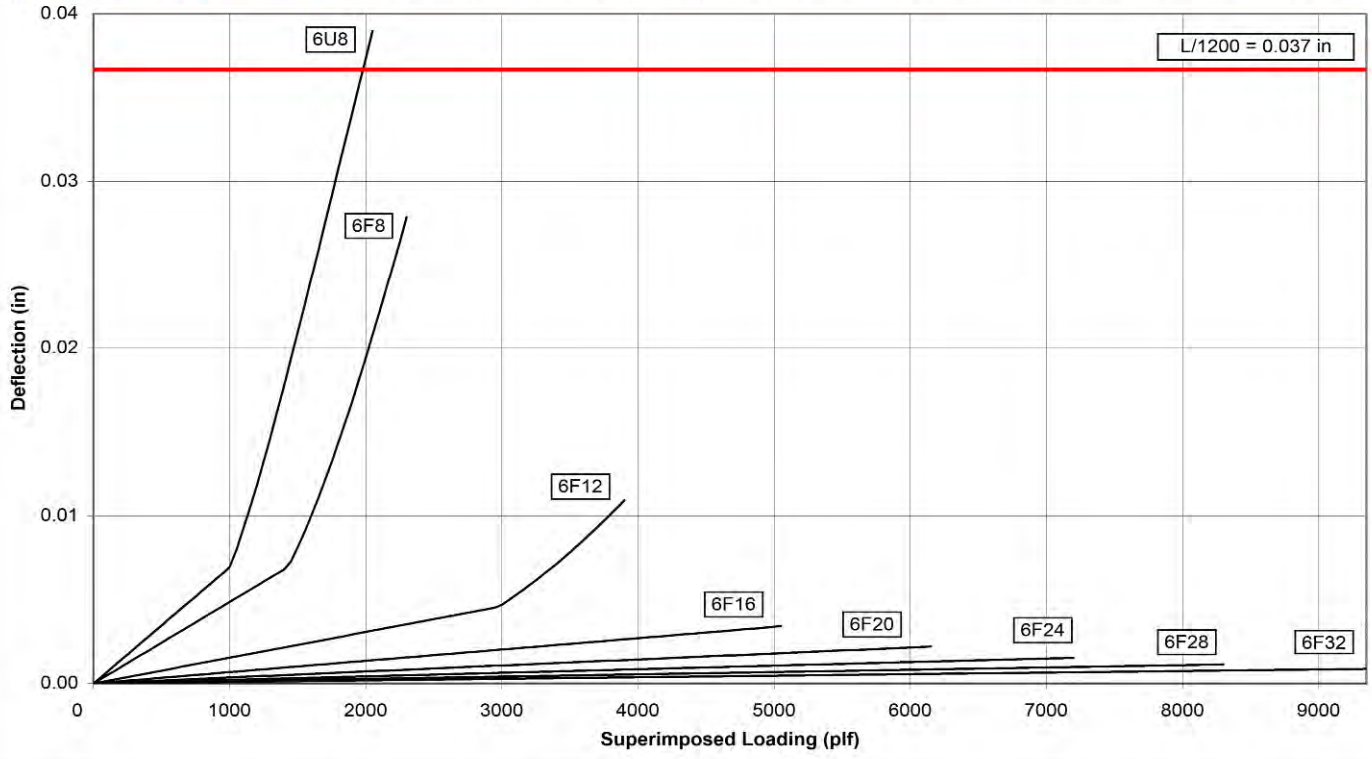

© 2015 Cast-Crete USA, Inc.

6 INCH U-LINTEL LENGTHS 4'-1" TO 4'-6"

DATA SHEET

GRAVITY	U-LINTEL TYPE	6U8	6F8-1B	6F12-1B	6F16-1B	6F20-1B	6F24-1B	6F28-1B	6F32-1B
	SAFE LOAD (LBS/FT)	1654	1887	3633	5050	6148	7227	8297	9357
	MOMENT (FT-LB)	4081	8203 (15)	14591 (17)	21065 (18)	27572 (18)	34114 (18)	40682 (46)	31384 (19)
	SHEAR (LBS)	2292	2615	3823	4987	6106	7220	8297	9357

UPLIFT	U-LINTEL TYPE	6U8	6F8-1T	6F12-1T	6F16-1T	6F20-1T	6F24-1T	6F28-1T	6F32-1T
	SAFE LOAD (LBS/FT)	NR	1083	1592	2084	2577	3069	3562	4055
	MOMENT (FT-LB)	NR	4823 (31)	5258 (13)	9223 (29)	13471 (37)	16638 (37)	19820 (37)	23016 (37)
	SHEAR (LBS)	NR	2257	3317	4343	5369	6395	7422	8448

LATERAL	U-LINTEL TYPE	6U8	6F8		RCMU
	SAFE LOAD (LBS/FT)	416	609		344
	MOMENT (FT-LB)	1327	1322		748
	SHEAR (LBS)	715	2209		935

4'-1" to 4'-6" HIGH STRENGTH LINTEL GRAVITY LOAD / DEFLECTION GRAPH

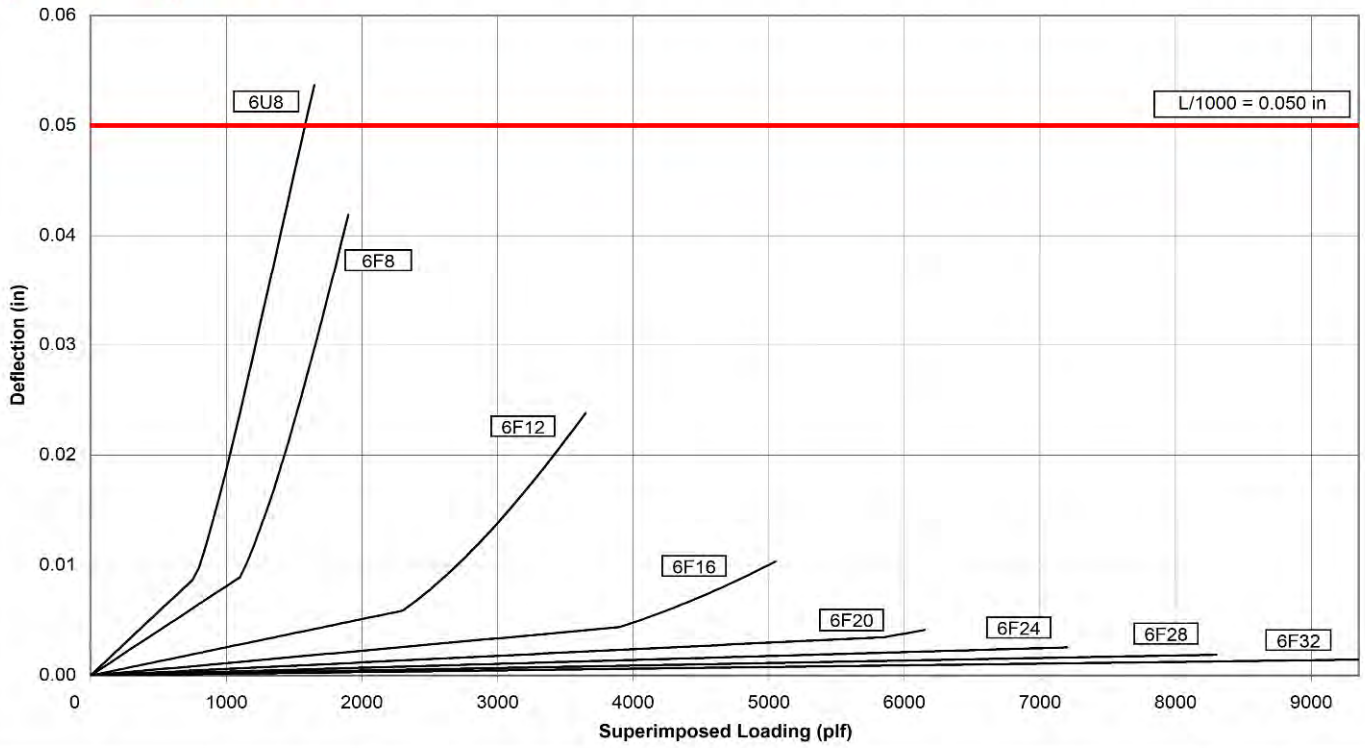

© 2015 Cast-Crete USA, Inc.

6 INCH U-LINTEL LENGTHS 4'-7" TO 5'-10"

DATA SHEET

	U-LINTEL TYPE	6U8	6F8-1B	6F12-1B	6F16-1B	6F20-1B	6F24-1B	6F28-1B	6F32-1B
GRAVITY	SAFE LOAD (LBS/FT)	1067	1260	2198	3557	5734	7227	8297 (31)	8225 (19)
	MOMENT (FT-LB)	4034	8132 (15)	14484 (17)	20923 (18)	27395 (18)	33901 (18)	40434 (46)	31101 (19)
	SHEAR (LBS)	2272	2586	3779	4928	6032	7132	8238	9348

	U-LINTEL TYPE	6U8	6F8-1T	6F12-1T	6F16-1T	6F20-1T	6F24-1T	6F28-1T	6F32-1T
UPLIFT	SAFE LOAD (LBS/FT)	NR	831	1222	1600	1979	2357	2736	3114
	MOMENT (FT-LB)	NR	4894 (31)	5364 (13)	9365 (29)	13649 (36)	16850 (36)	20068 (36)	23299 (36)
	SHEAR (LBS)	NR	2286	3361	4402	5443	6483	7524	8565

	U-LINTEL TYPE	6U8	6F8		RCMU
LATERAL	SAFE LOAD (LBS/FT)	300	350		198
	MOMENT (FT-LB)	1327	1322		748
	SHEAR (LBS)	715	2209		935

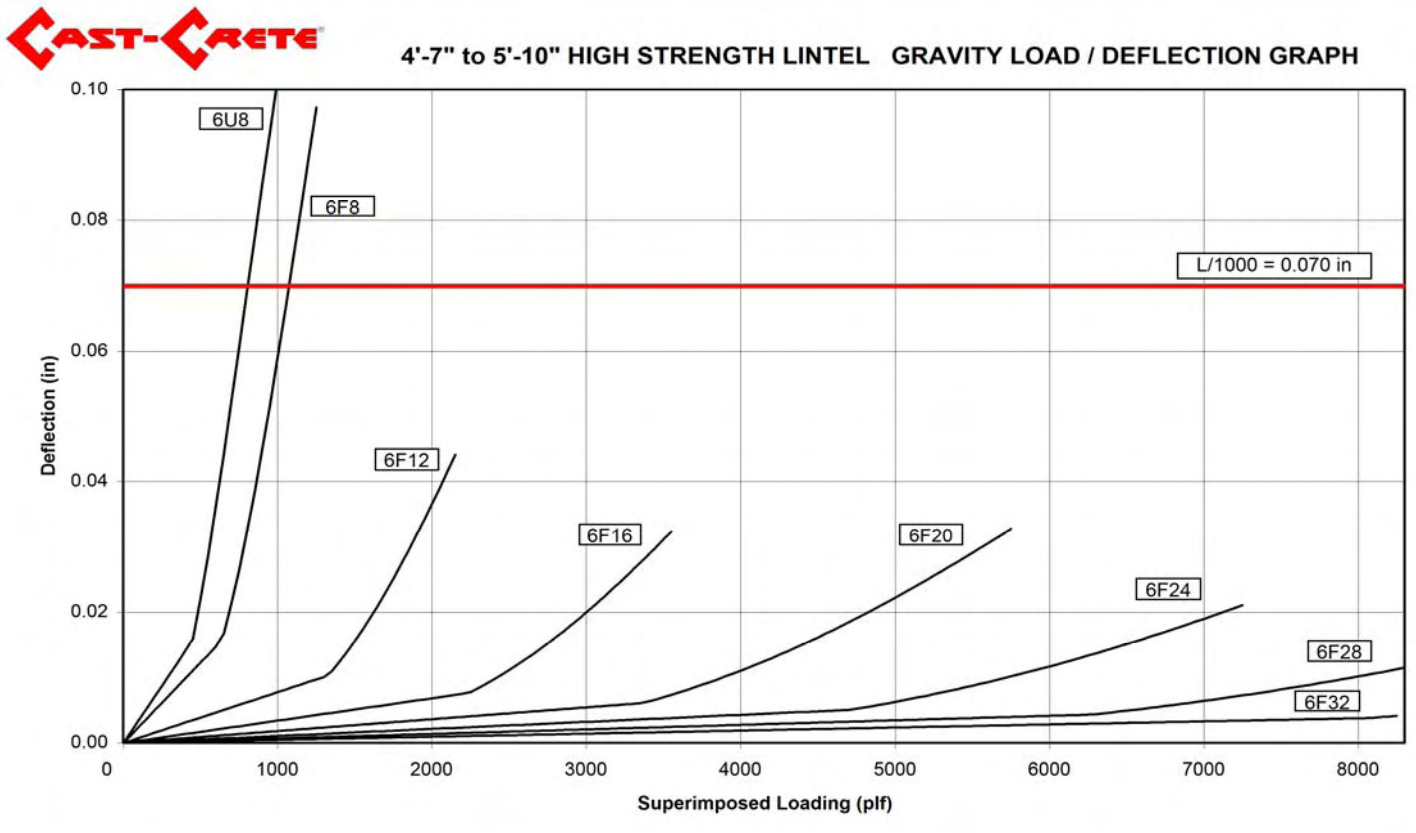

6 INCH U-LINTEL LENGTHS 5'-11" TO 6'-6"

DATA SHEET

	U-LINTEL TYPE	6U8	6F8-1B	6F12-1B	6F16-1B	6F20-1B	6F24-1B	6F28-1B	6F32-1B
GRAVITY	SAFE LOAD (LBS/FT)	949	1078	1831	2850	4328	6737	8297	9357
	MOMENT (FT-LB)	6949	10837 (10)	19226 (12)	27769 (13)	36371 (13)	45035 (13)	53746 (13)	62489 (14)
	SHEAR (LBS)	2263	2571	3757	4899	5996	7088	8186	9289

	U-LINTEL TYPE	6U8	6F8-1T	6F12-1T	6F16-1T	6F20-1T	6F24-1T	6F28-1T	6F32-1T
UPLIFT	SAFE LOAD (LBS/FT)	NR	723	1097 (9)	1437 (1)	1777	2117	2457	2797
	MOMENT (FT-LB)	NR	4937 (30)	5428 (13)	9450 (29)	13755 (36)	16979 (36)	20218 (36)	23470 (36)
	SHEAR (LBS)	NR	2301	3383	4431	5479	6527	7576	8624

	U-LINTEL TYPE	6U8	6F8		RCMU
LATERAL	SAFE LOAD (LBS/FT)	263	496		157
	MOMENT (FT-LB)	2374	2357		748
	SHEAR (LBS)	715	2209		935

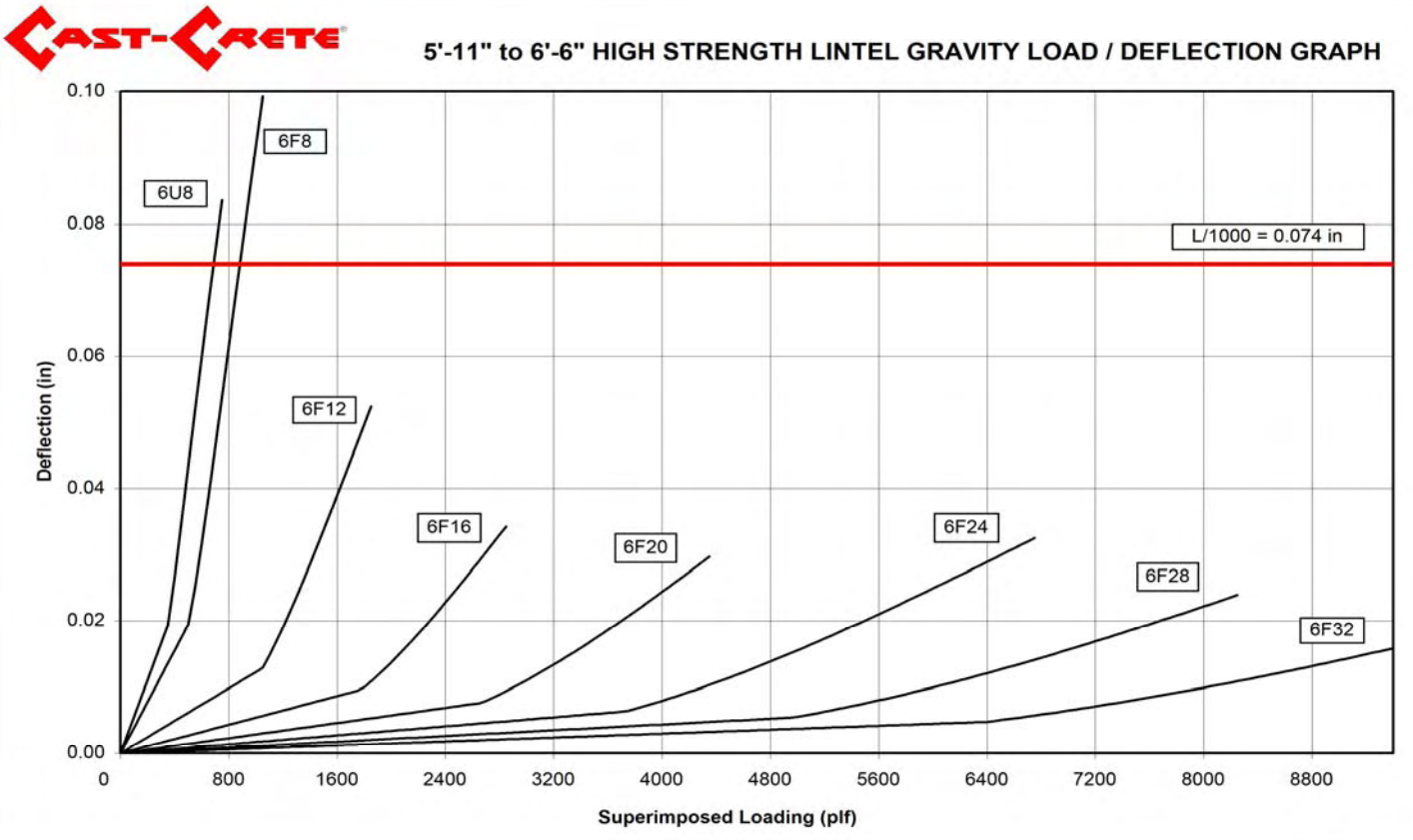

© 2015 Cast-Crete USA, Inc.

6 INCH U-LINTEL LENGTHS 6'-7" TO 7'-6"

DATA SHEET

	U-LINTEL TYPE	6U8	6F8-1B	6F12-1B	6F16-1B	6F20-1B	6F24-1B	6F28-1B	6F32-1B
GRAVITY	SAFE LOAD (LBS/FT)	779	883	1459	2188	3151	4524	6654	9357 (11)
	MOMENT (FT-LB)	6901	10764 (10)	19116 (12)	27622 (13)	36188 (13)	44815 (13)	53489 (13)	62196 (14)
	SHEAR (LBS)	2248	2549	3724	4855	5941	7022	8109	9201

	U-LINTEL TYPE	6U8	6F8-1T	6F12-1T	6F16-1T	6F20-1T	6F24-1T	6F28-1T	6F32-1T
UPLIFT	SAFE LOAD (LBS/FT)	NR	648 (16)	863 (13)	1249 (14)	1544 (9)	1840 (6)	2135 (4)	2431 (2)
	MOMENT (FT-LB)	NR	5010 (30)	5538 (13)	9597 (28)	13939 (36)	17199 (36)	20475 (36)	23764 (36)
	SHEAR (LBS)	NR	2323	3416	4475	5534	6593	7653	8712

	U-LINTEL TYPE	6U8	6F8		RCMU
LATERAL	SAFE LOAD (LBS/FT)	222	367		116
	MOMENT (FT-LB)	2374	2357		748
	SHEAR (LBS)	715	2209		935

6'-7" to 7'-6" HIGH STRENGTH LINTEL GRAVITY LOAD / DEFLECTION GRAPH

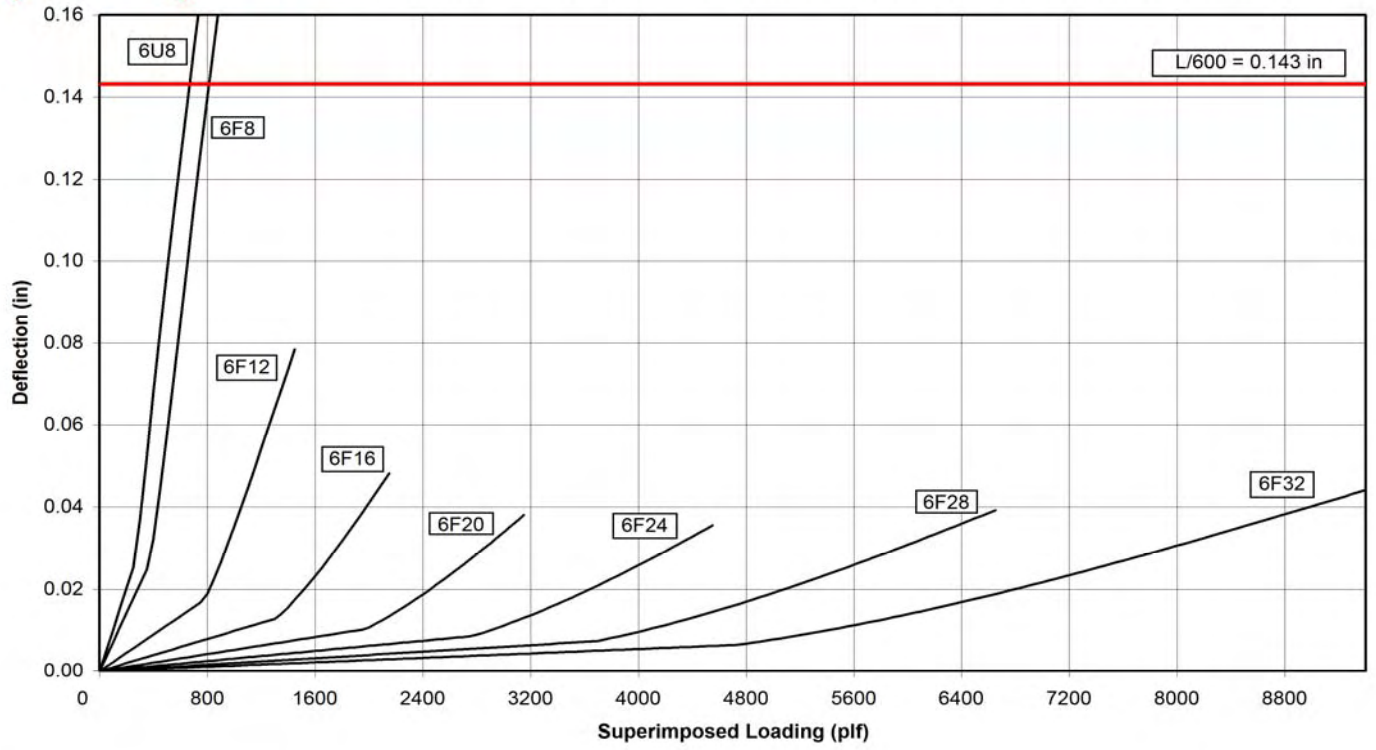

© 2015 Cast-Crete USA, Inc.

6 INCH U-LINTEL LENGTHS 7'-7" TO 9'-4"

DATA SHEET

	U-LINTEL TYPE	6U8	6F8-1B	6F12-1B	6F16-1B	6F20-1B	6F24-1B	6F28-1B	6F32-1B
GRAVITY	SAFE LOAD (LBS/FT)	584	660	1056	1523	2084	2795	3731	5017
	MOMENT (FT-LB)	6793	10601 (10)	18872 (12)	27296 (13)	35780 (13)	44326 (13)	52919 (14)	61544 (14)
	SHEAR (LBS)	2222	2509	3663	4774	5840	6901	7968	9040

	U-LINTEL TYPE	6U8	6F8-1T	6F12-1T	6F16-1T	6F20-1T	6F24-1T	6F28-1T	6F32-1T
UPLIFT	SAFE LOAD (LBS/FT)	NR	575	571 (12)	980 (27)	1252 (26)	1492 (24)	1732 (22)	1972 (20)
	MOMENT (FT-LB)	NR	8005 (13)	5783 (12)	9923 (27)	14346 (35)	17688 (35)	21045 (35)	24416 (35)
	SHEAR (LBS)	NR	2588	3476	4556	5635	6714	7794	8873

	U-LINTEL TYPE	6U8	6F8		RCMU
LATERAL	SAFE LOAD (LBS/FT)	173	352		74
	MOMENT (FT-LB)	3606	3564		748
	SHEAR (LBS)	715	2209		935

7'-7" to 9'-4" HIGH STRENGTH LINTEL GRAVITY LOAD / DEFLECTION GRAPH

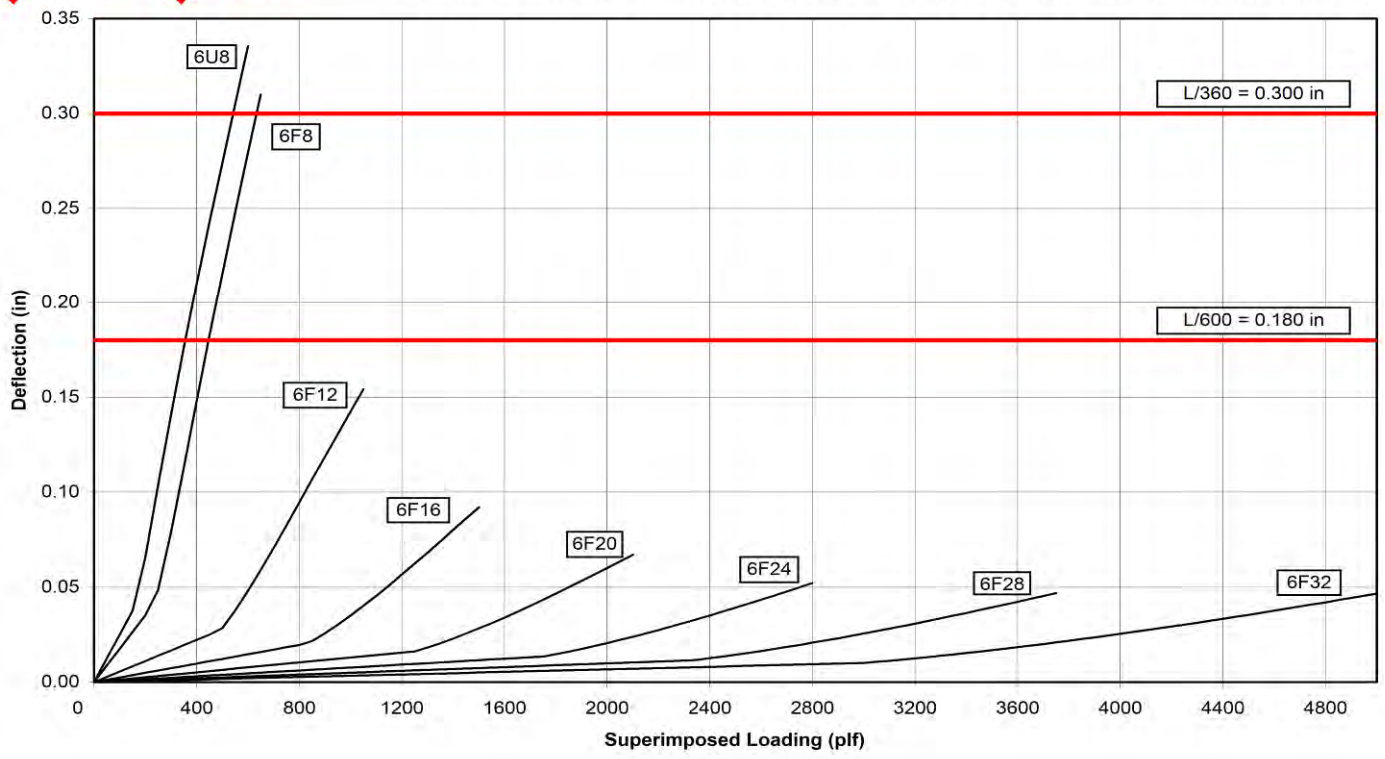

© 2015 Cast-Crete USA, Inc.

6 INCH U-LINTEL LENGTHS 9'-5" TO 10'-6"

DATA SHEET

GRAVITY	U-LINTEL TYPE	6U8	6F8-1B	6F12-1B	6F16-1B	6F20-1B	6F24-1B	6F28-1B	6F32-1B
	SAFE LOAD (LBS/FT)	503	566	895	1270	1706	2236	2898	3747
	MOMENT (FT-LB)	6712	10478 (11)	18687 (12)	27050 (13)	35473 (13)	43957 (14)	52488 (14)	61052 (14)
	SHEAR (LBS)	2205	2483	3625	4723	5776	6824	7878	8937

UPLIFT	U-LINTEL TYPE	6U8	6F8-1T	6F12-1T	6F16-1T	6F20-1T	6F24-1T	6F28-1T	6F32-1T
	SAFE LOAD (LBS/FT)	NR	514	462 (12)	787 (27)	1121 (33)	1336 (31)	1551 (29)	1766 (28)
	MOMENT (FT-LB)	NR	8127 (13)	5967 (12)	10169 (27)	14654 (34)	18057 (34)	21476 (34)	24908 (34)
	SHEAR (LBS)	NR	2614	3515	4607	5699	6791	7884	8976

LATERAL	U-LINTEL TYPE	6U8	6F8		RCMU
	SAFE LOAD (LBS/FT)	151	276		58
	MOMENT (FT-LB)	3606	3564		748
	SHEAR (LBS)	715	2209		935

9'-5" to 10'-6" HIGH STRENGTH LINTEL GRAVITY LOAD / DEFLECTION GRAPH

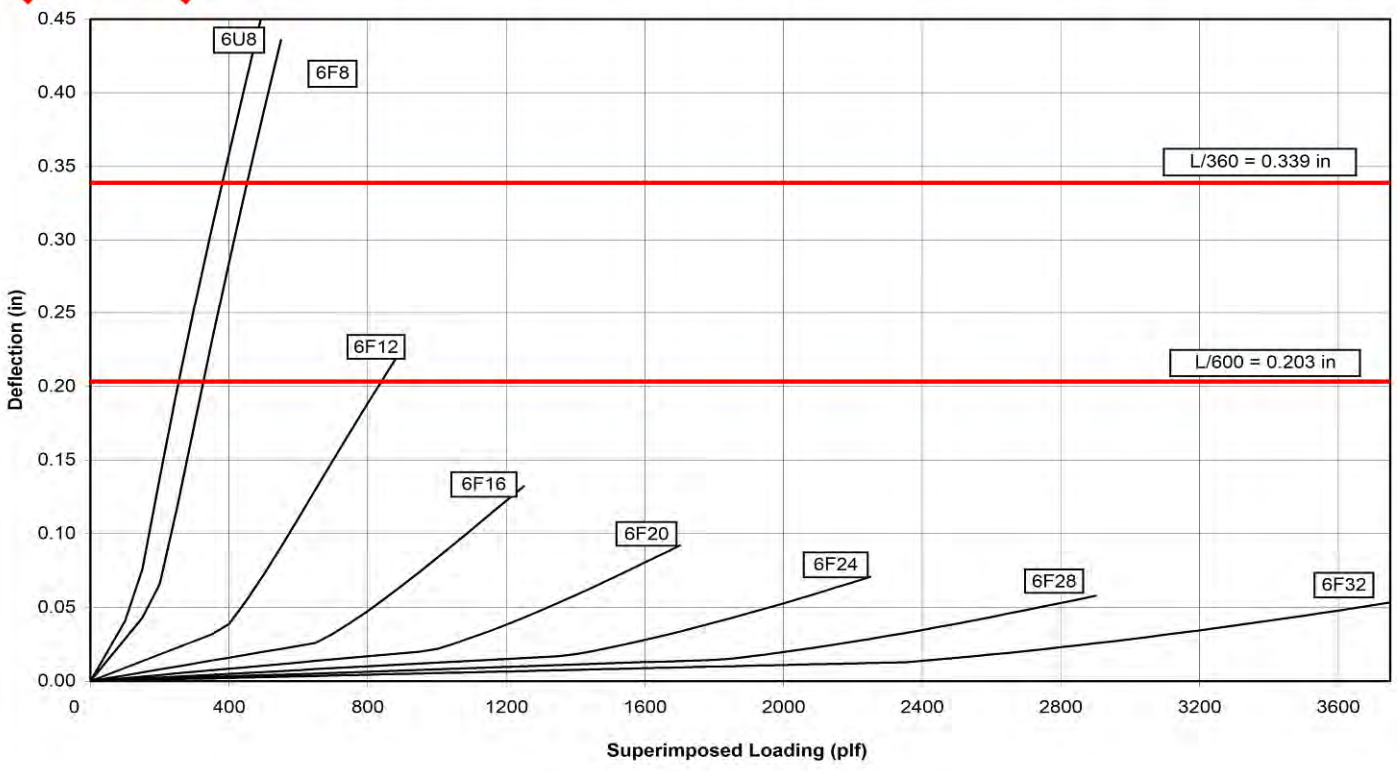

© 2015 Cast-Crete USA, Inc.

6 INCH U-LINTEL LENGTHS 10'-7" TO 11'-4"

DATA SHEET

	U-LINTEL TYPE	6U8	6F8-1B	6F12-1B	6F16-1B	6F20-1B	6F24-1B	6F28-1B	6F32-1B
GRAVITY	SAFE LOAD (LBS/FT)	457	513	805	1133	1507	1952	2492	3163
	MOMENT (FT-LB)	9698	13389 (7)	23977 (9)	34828 (9)	45779 (10)	56839 (10)	67980 (10)	79173 (10)
	SHEAR (LBS)	2193	2465	3597	4686	5730	6769	7814	8864

	U-LINTEL TYPE	6U8	6F8-1T	6F12-1T	6F16-1T	6F20-1T	6F24-1T	6F28-1T	6F32-1T
UPLIFT	SAFE LOAD (LBS/FT)	NR	474	404 (11)	685 (26)	985 (33)	1213 (33)	1442 (33)	1645 (32)
	MOMENT (FT-LB)	NR	8225 (13)	6113 (11)	10363 (26)	14896 (33)	18348 (33)	21815 (33)	25296 (34)
	SHEAR (LBS)	NR	2632	3542	4644	5745	6846	7948	9049

	U-LINTEL TYPE	6U8	6F8		RCMU
LATERAL	SAFE LOAD (LBS/FT)	139	311		49
	MOMENT (FT-LB)	4785	4708		748
	SHEAR (LBS)	715	2209		935

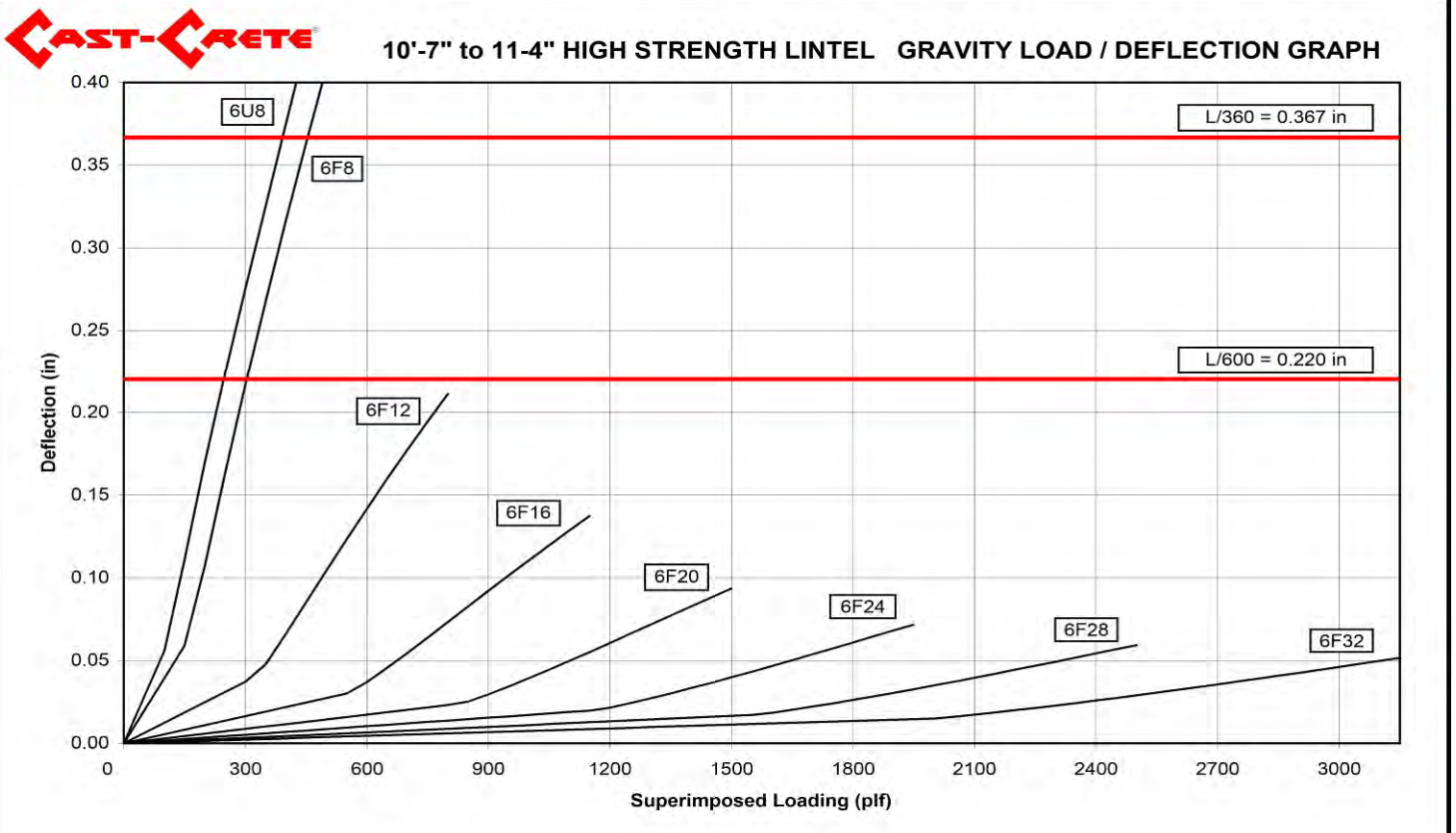

© 2015 Cast-Crete USA, Inc.

6 INCH U-LINTEL LENGTHS 11'-5" TO 12'-0"

DATA SHEET

	U-LINTEL TYPE	6U8	6F8-1B	6F12-1B	6F16-1B	6F20-1B	6F24-1B	6F28-1B	6F32-1B
GRAVITY	SAFE LOAD (LBS/FT)	425	477	744	1042	1377	1769	2238	2808
	MOMENT (FT-LB)	9644	13305 (7)	23852 (9)	34662 (9)	45571 (10)	56589 (10)	67689 (10)	78841 (10)
	SHEAR (LBS)	2183	2450	3575	4657	5693	6725	7763	8805

	U-LINTEL TYPE	6U8	6F8-1T	6F12-1T	6F16-1T	6F20-1T	6F24-1T	6F28-1T	6F32-1T
UPLIFT	SAFE LOAD (LBS/FT)	NR	454 (7)	367 (11)	619 (26)	888 (33)	1093 (33)	1299 (33)	1506 (33)
	MOMENT (FT-LB)	NR	8308 (13)	6237 (11)	10529 (26)	15104 (33)	18597 (33)	22106 (33)	25628 (33)
	SHEAR (LBS)	NR	2647	3564	4673	5782	6890	7999	9108

	U-LINTEL TYPE	6U8	6F8		RCMU
LATERAL	SAFE LOAD (LBS/FT)	131	277		44
	MOMENT (FT-LB)	4785	4708		748
	SHEAR (LBS)	715	2209		935

11'-5" to 12'-0" HIGH STRENGTH LINTEL GRAVITY LOAD / DEFLECTION GRAPH

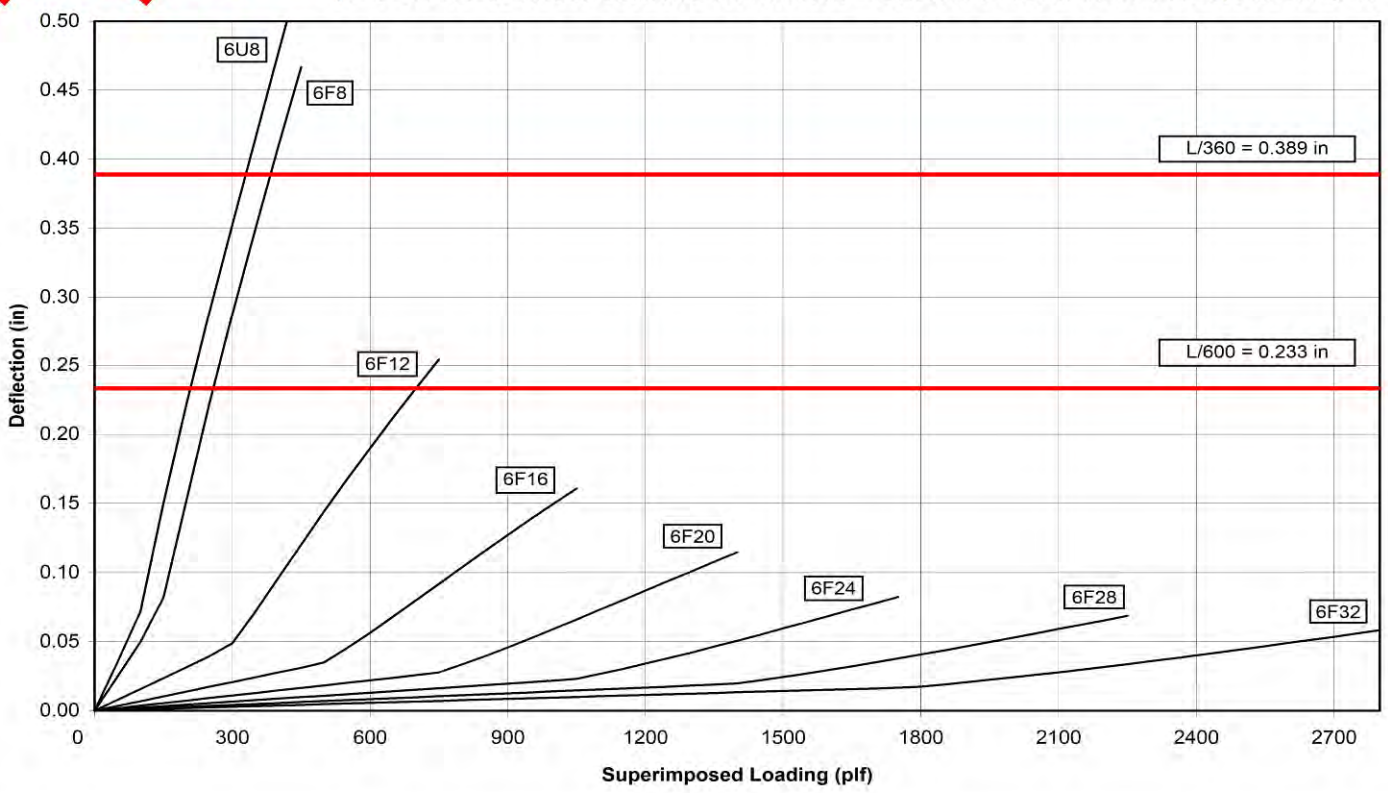

© 2015 Cast-Crete USA, Inc.

6 INCH U-LINTEL LENGTHS 12'-1" TO 13'-4"

DATA SHEET

	U-LINTEL TYPE	6U8	6F8-1B	6F12-1B	6F16-1B	6F20-1B	6F24-1B	6F28-1B	6F32-1B
GRAVITY	SAFE LOAD (LBS/FT)	373	417	646	895	1170	1485	1852	2285
	MOMENT (FT-LB)	9524	13125 (7)	23581 (9)	34300 (9)	45119 (10)	56047 (10)	67056 (10)	78117 (10)
	SHEAR (LBS)	2164	2421	3531	4598	5620	6637	7660	8688

	U-LINTEL TYPE	6U8	6F8-1T	6F12-1T	6F16-1T	6F20-1T	6F24-1T	6F28-1T	6F32-1T
UPLIFT	SAFE LOAD (LBS/FT)	NR	402 (13)	308 (11)	516 (25)	736 (32)	906 (32)	1076 (32)	1247 (32)
	MOMENT (FT-LB)	NR	8489 (12)	6509 (11)	10891 (25)	15556 (32)	19140 (32)	22739 (32)	26352 (32)
	SHEAR (LBS)	NR	2676	3608	4732	5855	6978	8102	9225

	U-LINTEL TYPE	6U8	6F8		6F12
LATERAL	SAFE LOAD (LBS/FT)	117	223		35
	MOMENT (FT-LB)	4785	4708		748
	SHEAR (LBS)	715	2209		935

12'-1" to 13'-4" HIGH STRENGTH LINTEL GRAVITY LOAD / DEFLECTION GRAPH

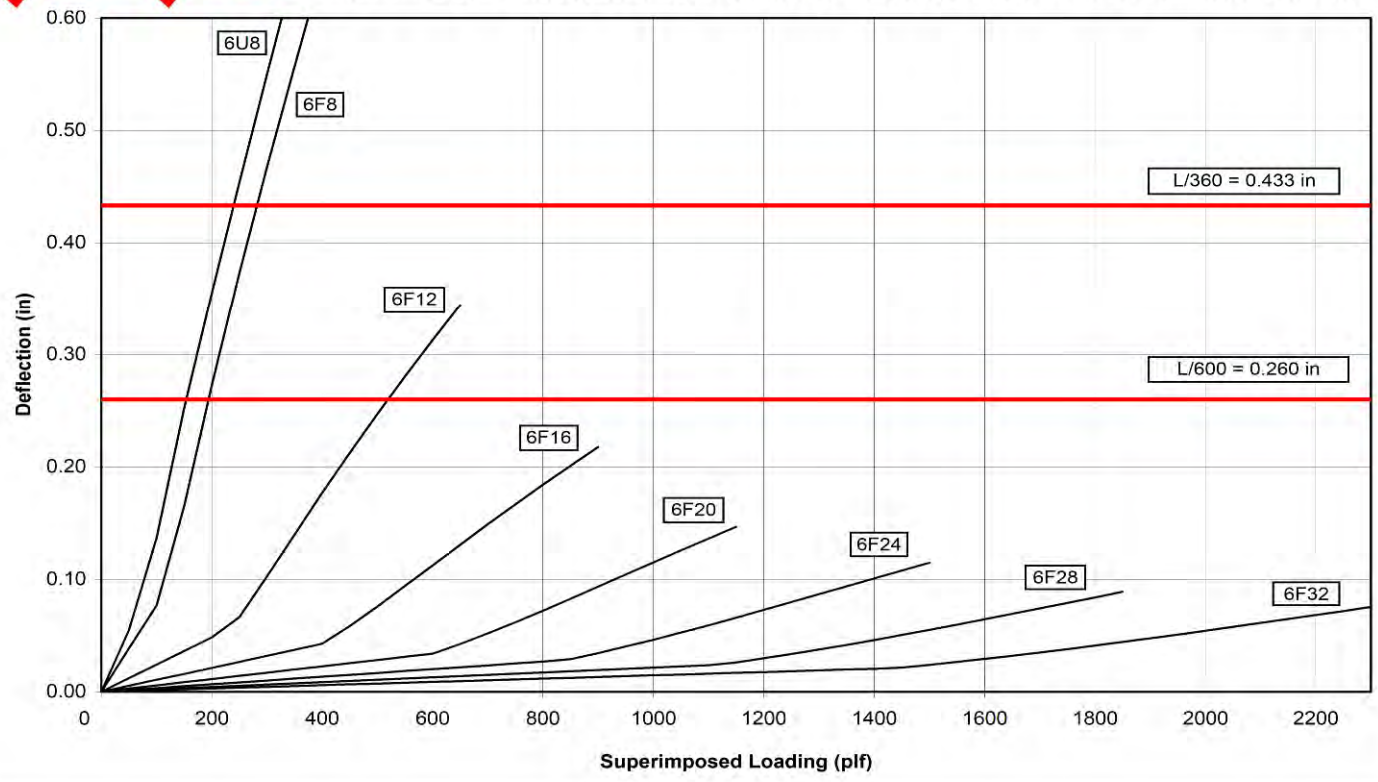

© 2015 Cast-Crete USA, Inc.

6 INCH U-LINTEL LENGTHS 13'-5" TO 14'-0"

DATA SHEET

GRAVITY	U-LINTEL TYPE	6U8	6F8-1B	6F12-1B	6F16-1B	6F20-1B	6F24-1B	6F28-1B	6F32-1B
	SAFE LOAD (LBS/FT)	351	392	605	835	1087	1373	1703	2087
	MOMENT (FT-LB)	9460	13027 (7)	23434 (9)	34104 (9)	44875 (10)	55753 (10)	66714 (10)	77726 (10)
	SHEAR (LBS)	2154	2406	3509	4569	5583	6593	7609	8629

UPLIFT	U-LINTEL TYPE	6U8	6F8-1T	6F12-1T	6F16-1T	6F20-1T	6F24-1T	6F28-1T	6F32-1T
	SAFE LOAD (LBS/FT)	NR	368 (13)	285 (10)	475 (24)	677 (31)	832 (32)	989 (32)	1145 (32)
	MOMENT (FT-LB)	NR	8586 (12)	6655 (10)	11086 (24)	15801 (31)	19433 (32)	23082 (32)	26743 (32)
	SHEAR (LBS)	NR	2691	3630	4761	5892	7022	8153	9284

LATERAL	U-LINTEL TYPE	6U8	6F8		RCMU
	SAFE LOAD (LBS/FT)	111	202		32
	MOMENT (FT-LB)	4785	4708		748
	SHEAR (LBS)	715	2209		935

13'-5" to 14'-0" HIGH STRENGTH LINTEL GRAVITY LOAD / DEFLECTION GRAPH

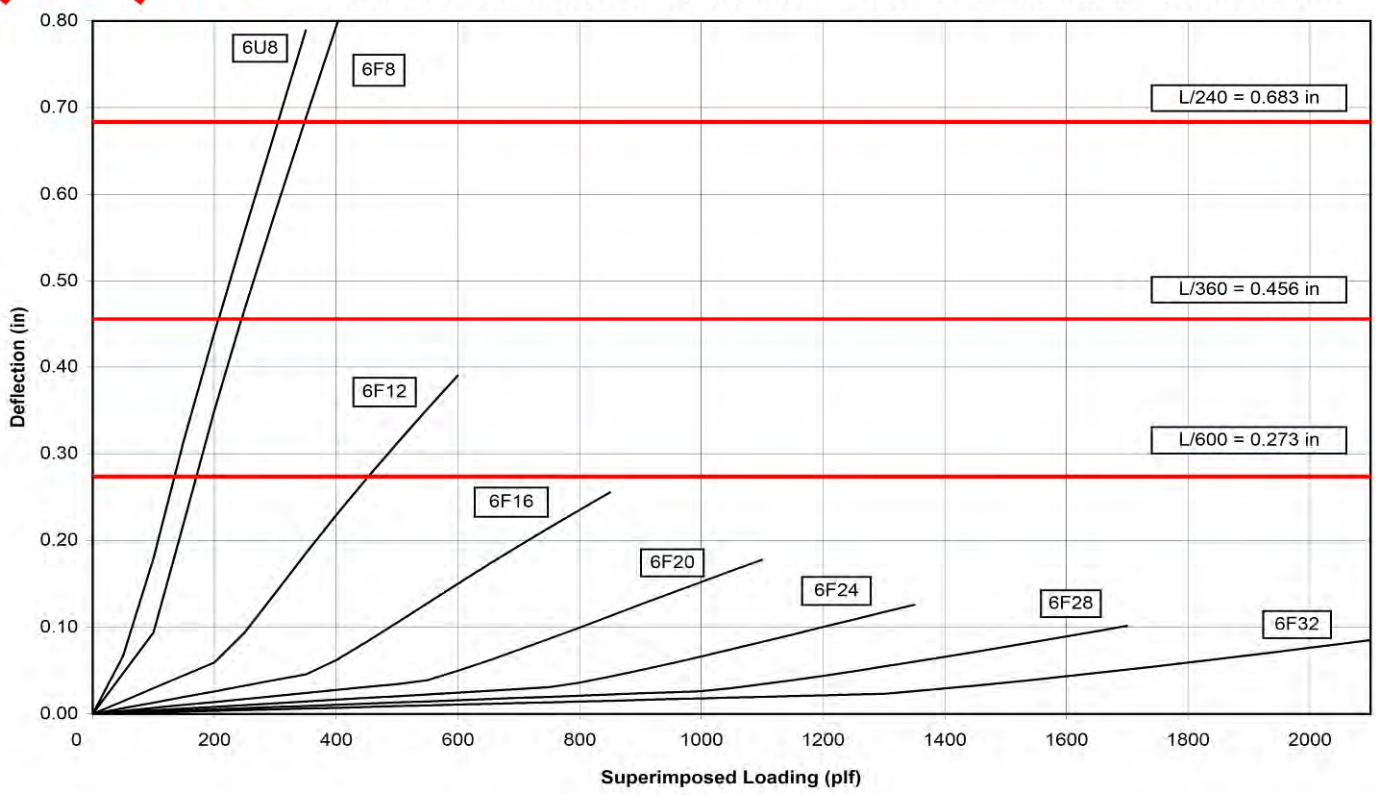

© 2015 Cast-Crete USA, Inc.

6 INCH U-LINTEL LENGTHS 14'-1" TO 17'-4"

DATA SHEET

GRAVITY	U-LINTEL TYPE	6U8	6F8-1B	6F12-1B	6F16-1B	6F20-1B	6F24-1B	6F28-1B	6F32-1B
	SAFE LOAD (LBS/FT)	NR	299	455	620	794	985	1198	1437
	MOMENT (FT-LB)	NR	12465 (7)	22591 (9)	32980 (10)	43469 (10)	54067 (10)	64746 (11)	75477 (11)
	SHEAR (LBS)	NR	2333	3399	4422	5400	6373	7352	8336

UPLIFT	U-LINTEL TYPE	6U8	6F8-1T	6F12-1T	6F16-1T	6F20-1T	6F24-1T	6F28-1T	6F32-1T
	SAFE LOAD (LBS/FT)	NR	253 (12)	208 (9)	338 (22)	476 (29)	585 (29)	693 (29)	803 (29)
	MOMENT (FT-LB)	NR	9149 (12)	7499 (9)	12211 (22)	17206 (29)	21120 (29)	25049 (29)	28992 (29)
	SHEAR (LBS)	NR	2764	3740	4908	6075	7242	8410	9577

LATERAL	U-LINTEL TYPE	6U8	6F8		RCMU
	SAFE LOAD (LBS/FT)	NR	130		21
	MOMENT (FT-LB)	NR	4708		748
	SHEAR (LBS)	NR	2209		935

14'-1" to 17'-4" HIGH STRENGTH LINTEL GRAVITY LOAD / DEFLECTION GRAPH

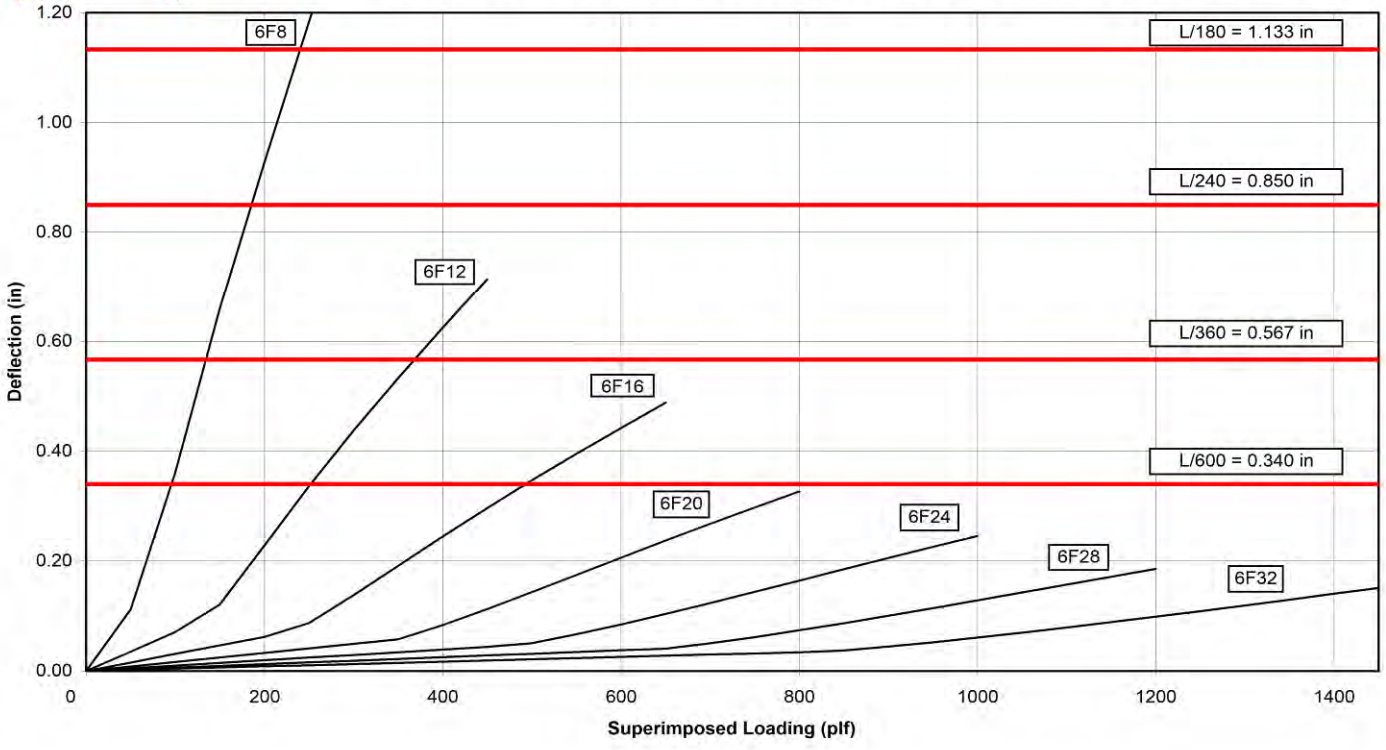

© 2015 Cast-Crete USA, Inc.

4 INCH SOLID LINTEL (4S8) ALL LENGTHS

DATA SHEET

	LINTEL LENGTHS	2'-8" TO 3'-6"	3'-7" TO 4'-0"	4'-1" TO 4'-6"	4'-7" TO 5'-10"	5'-11" TO 6'-6"	6'-7" TO 7'-6"	7'-7' TO 9'-4"	9'-5" TO 10'-6"
GRAVITY	SAFE LOAD (LBS/FT)	1180	959	789	460	360	260	156	116
	MOMENT (FT-LB)	1803	1792	1780	1738	1712	1669	1573	1500
	SHEAR (LBS)	1155	1149	1142	1125	1116	1103	1080	1064
UPLIFT	SAFE LOAD (LBS/FT)	687	597	529	407	366	280	187	152
	MOMENT (FT-LB)	1663	1674	1686	1728	1754	1797	1893	1966
	SHEAR (LBS)	1088	1095	1101	1119	1127	1140	1164	1179
LATERAL	SAFE LOAD (LBS/FT)	371	320	258	148	118	87	55	43
	MOMENT (FT-LB)	561	561	561	561	561	561	561	561
	SHEAR (LBS)	587	587	587	587	587	587	587	587

4 INCH SOLID HIGH STRENGTH LINTEL GRAVITY LOAD / DEFLECTION GRAPH

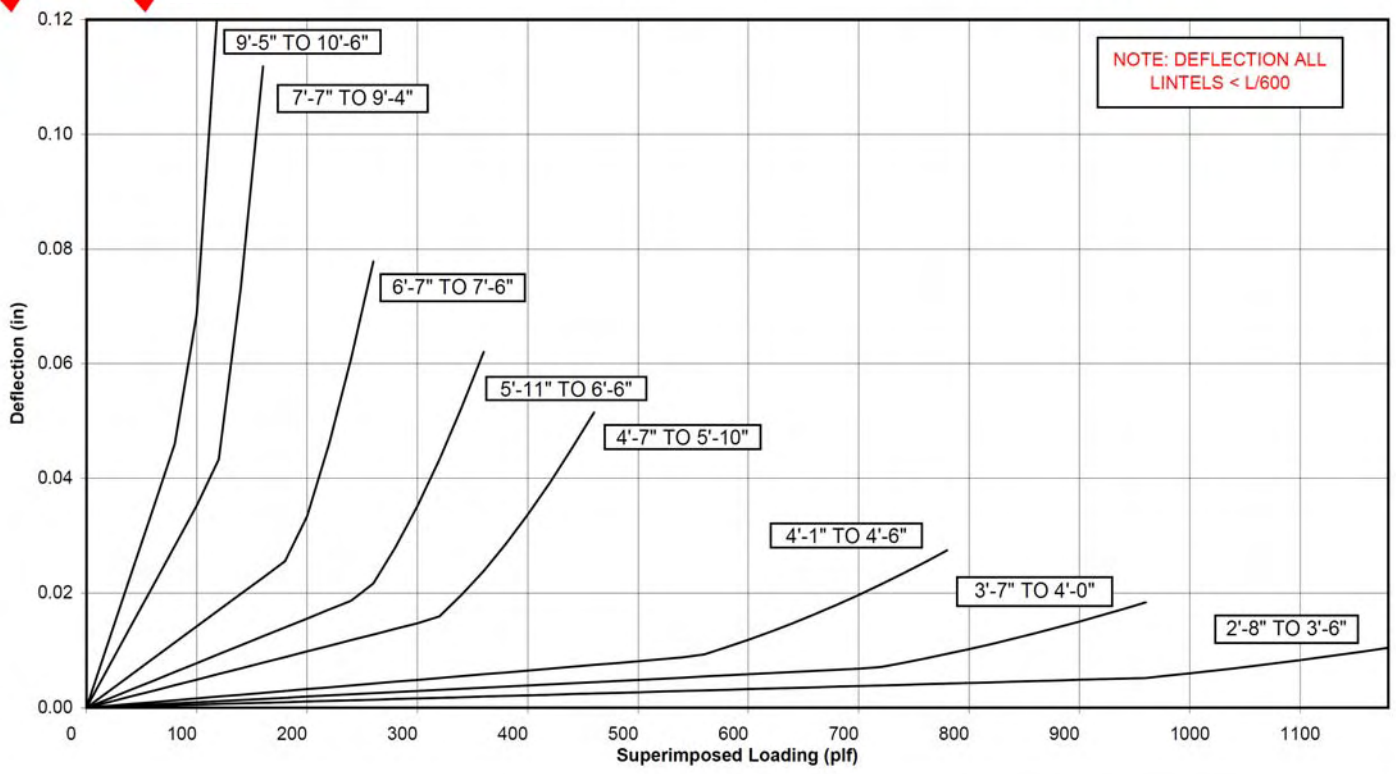

© 2015 Cast-Crete USA, Inc.

CONTACT CAST-CRETE FOR ALL YOUR CUSTOM PRECAST PROJECTS

LANDSCAPE MARKER

NO JOB IS TOO SMALL OR TOO LARGE

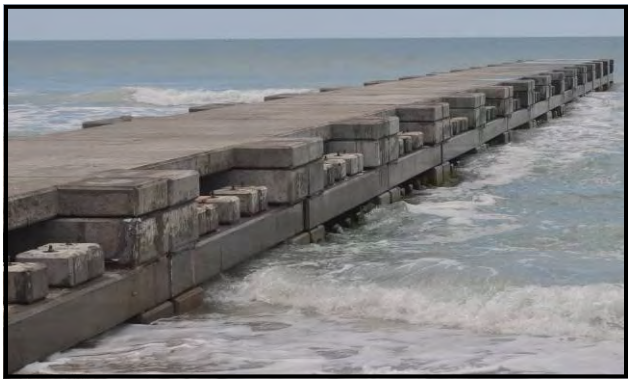

MARINE STRUCTURE FOR EROSION CONTROL

RADIUS LINTELS

ARCH LINTELS

- LINTELS
- SILLS
- WALL PANELS
- STAIR TREADS
- BOLLARDS
- WALL CAPS
- COLUMN CAPS
- AND MORE…...

COMPLEMENTARY INTERACTIVE CD

To Request Your Free Copy Visit Us At **www.castcrete.com**

Now Available

PRODUCT INFORMATION CD

CAST-CRETE® products are distributed by the most progressive concrete products companies. Visit us at www.castcrete.com for the distributor nearest you.

1-800-999-4641 www.castcrete.com

Cast-Crete USA, Inc.
Post Office Box 24567
Tampa, FL 33623-4567
Phone: (813) 621-4641
Fax: (813) 620-3602

Member of NATIONAL CONCRETE MASONRY ASSOCIATION

© 2015 Cast-Crete USA, Inc.

Catalog No. 0515-1015